GRUPO AG®

... desde 1979

Dados y Accesorios

RAD TORQUE SYSTEMS · Hi-Force HYDRAULIC TOOLS · Snap-on · OZAT

01.800.890.0799

www.AGgrupo.mx

SMART SOCKETS™

All RAD Smart Sockets Include:

- Weatherproof storage case
- Plug & USB cord
- Calibration certificate to ISO 17025

INSTANT TORQUE READ-OUT **REVOLUTIONARY** MEASURING SOCKET

RAD **SMART SOCKET™ SERIES**

Instant torque read-out of your live application!
Strain gauge technology measures torque applied to bolt. Patented Product.

The RAD Smart Socket™ series use RAD Torque's transducer technology combined with a custom socket to measure the actual torque applied to the bolt during a torque cycle. By innovative design, the Smart Socket™ is no larger than a standard socket. Its compact size and innovative technology makes the Smart Socket™ a perfect audit tool for inspecting bolted joints and it can function as a master calibration for various torque tools.

- Measures and displays peak torque
- Full data collection - export to email by PDF, XLS, CSV
- View in real time via Bluetooth onto your smartphone or tablet
- Transducer accuracy of +/-1%

ANDROID APP ON Google play

LABORATORY ACCREDITATION BUREAU a division of A2LA ACCREDITED ISO/IEC 17025
Certificate # L2325 Calibration

PART NUMBER	SMART SOCKET MODEL	TORQUE (FT.) LOW	TORQUE (FT.) HIGH	DRIVE SIZE	WEIGHT (lbs.)	DIMENSION HEIGHT	DIMENSION DIAMETER
20879	33mm SMART SOCKET™	150	1500	3/4"	2.65	3.94"	2.83"
21363	36mm SMART SOCKET™	150	1500	1"	2.65	3.94"	2.83"
22158	41mm SMART SOCKET™	150	1500	1"	2.65	3.42"	2.83"
20880	46mm SMART SOCKET™	150	1500	1"	2.65	3.42"	2.83"
20881	50mm SMART SOCKET™	300	3000	1"	3.20	3.50"	3.40"
20882	55mm SMART SOCKET™	300	3000	1"	3.20	3.50"	3.40"
20883	60mm SMART SOCKET™	300	3000	1"	3.20	3.50"	3.40"
20394	65mm SMART SOCKET™	800	8000	1"	8.7	4.75"	4.53"
20884	70mm SMART SOCKET™	800	8000	1.5"	8.7	4.75"	4.53"
20885	80mm SMART SOCKET™	800	8000	1.5"	8.7	4.75"	4.53"

Accuracy of +/-1%

IS - BOCAS HEXAGONALES TAMAÑO AF PARA TRABAJOS PESADOS, SISTEMA IMPERIAL

- Cuadradillos desde 3/4" a 2 1/2"
- Tamaños entre caras hasta 6 7/8"
- Suministradas con anillo y pasador de sujeción

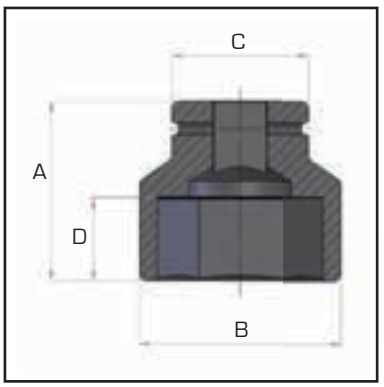

Las bocas de impacto de alta calidad para trabajos pesados del sistema imperial de Hi-Force están diseñadas y fabricadas para utilizarlas con todos los productos de atornillado de Hi-Force, incluidas las llaves dinamométricas hidráulicas y las llaves de impacto. La serie IS consta de 47 modelos, con cuadradillos de 3/4" a 2 1/2" y tamaños entre caras de hasta 6 7/8". Se pueden suministrar bocas especiales, de mayor longitud y bi-hexagonales, a petición del cliente.

F

Número modelo	Cuadradillo	Tuerca AF pulgadas	Dimensiones en mm A	B	C	D
IS2-101	3/4"	1 1/16"	52	40	38	16
IS2-104	3/4"	1 1/4"	52	44	44	20
IS2-107	3/4"	1 7/16"	56	51	44	23
IS2-110	3/4"	1 5/8"	62	58	44	27
IS2-113	3/4"	1 13/16"	68	67	44	32
IS2-200	3/4"	2"	72	71	54	35
IS2-203	3/4"	2 3/16"	74	77	54	35
IS2-206	3/4"	2 3/8"	75	84	54	35
IS9-101	1"	1 1/16"	58	44	51	17
IS9-104	1"	1 1/4"	60	51	51	21
IS9-107	1"	1 7/16"	62	56	52	26
IS9-110	1"	1 5/8"	62	62	52	26
IS9-113	1"	1 13/16"	64	68	58	27
IS9-200	1"	2"	70	74	58	31
IS9-203	1"	2 3/16"	72	80	62	32
IS9-206	1"	2 3/8"	78	87	62	35
IS9-209	1"	2 9/16"	80	93	62	36
IS9-212	1"	2 3/4"	85	98	62	40
IS9-215	1"	2 15/16"	95	104	86	48
IS9-302	1"	3 1/8"	100	109	86	52
IS9-308	1"	3 1/2"	105	125	86	52
IS9-314	1"	3 7/8"	105	136	95	52
IS5-113	1 1/2"	1 13/16"	84	76	86	27
IS5-200	1 1/2"	2"	87	82	86	29

Número modelo	Cuadradillo	Tuerca AF pulgadas	Dimensiones en mm A	B	C	D
IS5-203	1 1/2"	2 3/16"	90	86	86	36
IS5-206	1 1/2"	2 3/8"	92	93	86	38
IS5-209	1 1/2"	2 9/16"	95	97	86	40
IS5-212	1 1/2"	2 3/4"	100	105	86	43
IS5-215	1 1/2"	2 15/16"	103	110	86	45
IS5-302	1 1/2"	3 1/8"	110	116	86	50
IS5-308	1 1/2"	3 1/2"	118	130	86	55
IS5-314	1 1/2"	3 7/8"	125	140	95	58
IS5-404	1 1/2"	4 1/4"	125	150	95	58
IS5-410	1 1/2"	4 5/8"	135	165	95	65
IS5-500	1 1/2"	5"	140	179	127	70
IS5-506	1 1/2"	5 3/8"	150	195	127	75
IS6-302	2 1/2"	3 1/8"	140	124	127	51
IS6-308	2 1/2"	3 1/2"	140	135	127	51
IS6-314	2 1/2"	3 7/8"	150	147	127	57
IS6-404	2 1/2"	4 1/4"	160	159	127	64
IS6-410	2 1/2"	4 5/8"	170	172	127	71
IS6-500	2 1/2"	5"	175	185	127	75
IS6-506	2 1/2"	5 3/8"	180	197	127	79
IS6-512	2 1/2"	5 3/4"	185	210	127	83
IS6-602	2 1/2"	6 1/8"	190	223	127	91
IS6-608	2 1/2"	6 1/2"	195	235	127	95
IS6-614	2 1/2"	6 7/8"	200	248	127	105

MS - BOCAS HEXAGONALES TAMAÑO AF PARA TRABAJOS PESADOS, SISTEMA MÉTRICO

Cuadradillos de 3/4" a 2 1/2"

Tamaños entre caras hasta145mm

Suministradas con anillo y pasador de sujeción

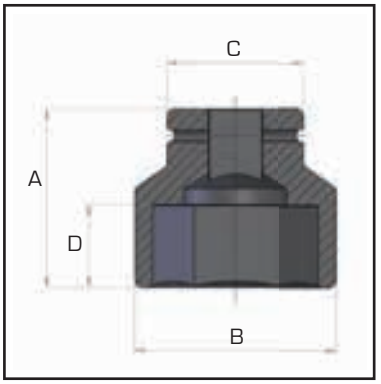

Las bocas de alta calidad para trabajos pesados y medidas métricas de Hi-Force están diseñadas y fabricadas para utilizarlas con todos los productos de atornillado de Hi-Force, incluidas las llaves dinamométricas hidráulicas y las llaves de impacto. La serie MS de bocas de impacto del sistema métrico ofrece 56 modelos, con cuadradillos de 3/4" a 2 1/2" y tamaños entre caras de hasta 145mm. Bocas especiales de mayor longitud, y especiales, disponibles a petición del cliente.

F

Número modelo	Cuadradillo	Tuerca AF mm	Dimensiones en mm A	B	C	D
MS2-24	3/4"	24	50	39	44	16
MS2-27	3/4"	27	54	43	44	16
MS2-30	3/4"	30	54	47	44	23
MS2-32	3/4"	32	56	49	44	23
MS2-36	3/4"	36	56	54	44	23
MS2-41	3/4"	41	58	60	44	24
MS2-46	3/4"	46	63	67	44	30
MS2-50	3/4"	50	72	71	54	32
MS2-55	3/4"	55	74	78	54	35
MS2-60	3/4"	60	75	84	54	37
MS9-24	1"	24	58	42	54	17
MS9-27	1"	27	58	46	54	17
MS9-30	1"	30	60	50	54	21
MS9-32	1"	32	60	51	54	21
MS9-36	1"	36	65	56	54	30
MS9-41	1"	41	67	63	54	31
MS9-46	1"	46	74	69	54	36
MS9-50	1"	50	80	74	54	42
MS9-55	1"	55	84	80	54	44
MS9-60	1"	60	87	86	54	44
MS9-65	1"	65	90	92	54	46
MS9-70	1"	70	96	99	54	51
MS9-75	1"	75	98	106	86	45
MS9-80	1"	80	100	112	86	48
MS9-85	1"	85	105	118	86	52
MS9-90	1"	90	105	125	86	52
MS9-95	1"	95	115	131	86	52
MS9-100	1"	100	115	137	95	58

Número modelo	Cuadradillo	Tuerca AF mm	Dimensiones en mm A	B	C	D
MS5-36	1 1/2"	36	78	64	86	23
MS5-41	1 1/2"	41	80	70	86	26
MS5-46	1 1/2"	46	84	76	86	27
MS5-50	1 1/2"	50	87	81	86	29
MS5-55	1 1/2"	55	90	86	86	36
MS5-60	1 1/2"	60	92	93	86	38
MS5-65	1 1/2"	65	95	97	86	40
MS5-70	1 1/2"	70	100	105	86	43
MS5-75	1 1/2"	75	103	110	86	45
MS5-80	1 1/2"	80	110	116	86	50
MS5-85	1 1/2"	85	118	125	86	55
MS5-90	1 1/2"	90	118	130	86	55
MS5-95	1 1/2"	95	118	137	95	55
MS5-100	1 1/2"	100	125	140	95	58
MS5-105	1 1/2"	105	125	150	95	58
MS5-110	1 1/2"	110	125	156	95	58
MS5-115	1 1/2"	115	135	160	95	65
MS5-130	1 1/2"	130	140	185	127	70
MS6-80	2 1/2"	80	140	124	127	51
MS6-85	2 1/2"	85	140	130	127	51
MS6-90	2 1/2"	90	145	136	127	54
MS6-95	2 1/2"	95	145	143	127	54
MS6-100	2 1/2"	100	150	149	127	57
MS6-105	2 1/2"	105	155	155	127	61
MS6-110	2 1/2"	110	160	161	127	64
MS6-115	2 1/2"	115	165	167	127	67
MS6-130	2 1/2"	130	175	188	127	75
MS6-145	2 1/2"	145	185	208	127	83

BW - LLAVES DE APOYO

BWH con BWM-50

- Adecuadas para las llaves TWS-N y TWH-N
- Cabezas hexagonales intercambiables
- Mecanismo de liberación seguro

La serie BW de llaves de apoyo de Hi-Force tiene un brazo de reacción de la tuerca posterior fácil de quitar y poner para evitar que ambas tuercas giren durante el apriete. El punto de reacción diseñado en forma de T evita el bloqueo una vez finalizado el apriete.

Juego completo:

Número modelo	Descripción	Soporte de llave de apoyo con juego de cabezas:			
		de		a	
		Imperial	Métrico	Imperial	Métrico
BWI-SET	Soporte completo con juego de cabezas imperial (12pzas)	1 7/16"	-	3 7/8"	-
BWM-SET	Soporte completo con juego de cabezas imperial (14pzas)	-	36mm	-	100mm

Componentes individuales:

Número modelo	Descripción	Tamaño AF hexagonal	
		Imperial	Métrico
Soporte			
BWH	Soporte de llave de apoyo	-	-
Cabezas hexagonales			
BWI-107	Cabeza hembra hexagonal para llave de apoyo (imperial)	1 7/16"	-
BWI-110	Cabeza hembra hexagonal para llave de apoyo (imperial)	1 5/8"	-
BWI-113	Cabeza hembra hexagonal para llave de apoyo (imperial)	1 13/16"	-
BWI-200	Cabeza hembra hexagonal para llave de apoyo (imperial)	2 "	-
BWI-203	Cabeza hembra hexagonal para llave de apoyo (imperial)	2 3/16"	-
BWI-206	Cabeza hembra hexagonal para llave de apoyo (imperial)	2 3/8 "	-
BWI-209	Cabeza hembra hexagonal para llave de apoyo (imperial)	2 9/16"	-
BWI-212	Cabeza hembra hexagonal para llave de apoyo (imperial)	2 3/4"	-
BWI-215	Cabeza hembra hexagonal para llave de apoyo (imperial)	2 15/16"	-
BWI-302	Cabeza hembra hexagonal para llave de apoyo (imperial)	3 1/8"	-
BWI-308	Cabeza hembra hexagonal para llave de apoyo (imperial)	3 1/2"	-
BWI-314	Cabeza hembra hexagonal para llave de apoyo (imperial)	3 7/8"	-
BWM-36	Cabeza hembra hexagonal para llave de apoyo (métrico)	-	36 mm
BWM-41	Cabeza hembra hexagonal para llave de apoyo (métrico)	-	41 mm
BWM-46	Cabeza hembra hexagonal para llave de apoyo (métrico)	-	46 mm
BWM-50	Cabeza hembra hexagonal para llave de apoyo (métrico)	-	50 mm
BWM-55	Cabeza hembra hexagonal para llave de apoyo (métrico)	-	55 mm
BWM-60	Cabeza hembra hexagonal para llave de apoyo (métrico)	-	60 mm
BWM-65	Cabeza hembra hexagonal para llave de apoyo (métrico)	-	65 mm
BWM-70	Cabeza hembra hexagonal para llave de apoyo (métrico)	-	70 mm
BWM-75	Cabeza hembra hexagonal para llave de apoyo (métrico)	-	75 mm
BWM-80	Cabeza hembra hexagonal para llave de apoyo (métrico)	-	80 mm
BWM-85	Cabeza hembra hexagonal para llave de apoyo (métrico)	-	85 mm
BWM-90	Cabeza hembra hexagonal para llave de apoyo (métrico)	-	90 mm
BWM-95	Cabeza hembra hexagonal para llave de apoyo (métrico)	-	95 mm
BWM-100	Cabeza hembra hexagonal para llave de apoyo (métrico)	-	100 mm

SIEMPRE LISTAS PARA SERVICIO PESADO.

Cuando las herramientas se deben usar, bajo presión y en aplicaciones de servicio pesado, usted necesita que cumplan. Siempre, sin fallas, sin hacer preguntas. Por esa razón, construimos herramientas con cuadro de 1/2" Snap-on® para estar a la altura de semejante situación sin importar el tipo de maquinaria pesada en la que esté trabajando,desde tractores agrícolas hasta cargadores basculantes y máquinas de pilotar, entre otros.

LLEGUE A LOS EXTREMOS.

¿Busca herramientas resistentes? Nosotros las tenemos. *Las herramientas de cuadro de Snap-on* se someten a pruebas rigurosas en las condiciones más extremas. Si pueden funcionar en dichas circunstancias, usted las puede usar.

AUMENTE SUS OPCIONES.

En Snap-on, puede darse el lujo de ser selectivo porque ofrecemos la gama más amplia de herramientas en la industria. Ofrecemos una línea de trinquetes que incluye una cabeza flexible y una empuñadura larga.

HERRAMIENTAS PARA TODA LA VIDA.

Todas nuestras herramientas están diseñadas para adaptarse y están construidas para ser utilizadas de por vida. Por eso usamos acero de aleación, formado en frío, en la mayoría de nuestras herramientas con cuadro para lograr resistencia y durabilidad.

DADOS DE IMPACTO FLANK DRIVE®

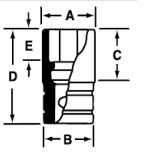

IMDM150A

315IMMYA

Poco profundo, mm

mm	6	12	A	B	C	D	E	El juego contiene: 315IMMYA 6	312IMM 6	310IMMYA 6	315IMDMYA 12
10	IMM100A	IMDM100A	15.0	22.6	22.2	38.1	7.9	•		•	•
11	IMM110A	IMDM110A	18.2	22.6	22.2	38.1	8.7	•		•	•
12	IMM120A	IMDM120A	19.0	24.3	22.2	38.1	9.5	•		•	•
13	IMM130A	IMDM130A	20.6	24.3	22.2	38.1	10.3	•		•	•
14	IMM140A	IMDM140A	22.2	24.3	22.2	38.1	10.3	•		•	•
15	IMM150A	IMDM150A	23.8	26.4	22.2	38.1	10.3	•	•	•	•
16	IMM160A	IMDM160A	24.6	26.4	22.2	38.1	11.9	•	•	•	•
17	IMM170A	IMDM170A	25.4	26.7	22.2	38.1	12.7	•	•	•	•
18	IMM180	IMDM180	26.7	26.7	19.1	38.1	12.7	•	•	•	•
19	IMM190	IMDM190	28.3	28.3	21.3	38.1	12.7	•	•	•	•
20	IMM200	IMDM200	29.9	29.9	21.1	38.1	14.2	•	•		•
21	IMM210	IMDM210	31.5	31.5	21.0	38.1	14.2	•	•		•
22	IMM220	IMDM220	33.3	33.3	21.4	38.1	15.9	•	•		•
23	IMM230	IMDM230	34.1	34.1	27.8	44.5	15.9	•	•		•
24	IMM240	IMDM240	34.9	34.9	27.8	44.5	15.9	•	•		•
25	IMM250	–	29.8	29.8	27.0	44.5	15.9		•		
26	IMM260	–	38.1	38.1	33.3	50.8	15.9				
27	IMM270	IMDM270	39.4	39.4	27.1	50.8	20.3		•		
29	IMM290	–	41.1	41.1	33.3	50.8	21.1				
30	IMM300	–	42.7	42.7	32.1	50.8	21.6				
32	IMM320	IMDM320	45.8 (45.7)	45.8 (45.7)	32.1 (36.8)	50.8	22.4 (20.6)				
34	IMM340	–	47.6	42.9	40.5	52.4	22.4				
36	IMM360	IMDM360	50.5 (50.8)	45.8 (46.0)	40.5 (41.3)	57.2	22.4 (22.2)				
39	–	IMDM390	53.8	39.6	36.8	50.8	22.3				
41	–	IMDM410	55.6	40.5	31.8	51.6	22.2				
46	IMM460	–	64.8	47.6	50.3	69.9	29.7				

Las dimensiones entre ( ) se aplican solo a los dados de 12 puntas.

Los juegos incluyen una bandeja de almacenamiento

Aplicaciones IMDM270: Se usa para tuercas de piñón y cremallera interior en vehículos BMW® X5® y X6®.

Aplicaciones IMDM320: Se usa para las tuercas de ejes en chasis de Mercedes-Benz® W140 de 1992–1999 clase SC y SL, Porsche® Boxster®, Cayenne® y 944, además de *BMW* X3®, *X5* y *X6* serie 2007 y posteriores. Otros usos incluyen tuercas del eje de transmisión de VW® Touareg® de 2003 y posteriores.

Aplicaciones IMDM360: Se utiliza para remover tuercas de piñón en camiones GM® de 2003 y Dodge® de 2004 con ejes AAM de 11.5. Otros usos incluyen los pernos del cigüeñal delantero del motor diesel Duramax® y el árbol de ejes del último modelo de *BMW*.

Aplicaciones IMDM390: Se usa en el cubo delantero del Toyota® Tundra 2007.

Aplicaciones IMDM410: Para extraer e instalar la junta de bola inferior en vehículos *BMW* de las series 5 y 7 de 2013 a la actualidad.

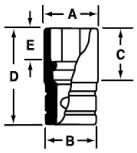

311IMYA

IMD200

Poco profundo, pulgadas

11	6	12	A	B	C	D	E	El juego contiene: 311IMYA 6	313IMD 12	307IMDYA 12
3/8	IM120A	IMD120A	19/32	29/32	7/8	1 1/2	5/16	•	•	•
7/16	IM140A	IMD140A	23/32	29/32	7/8	1 1/2	11/32	•	•	•
1/2	IM160A	IMD160A	13/16	29/32	7/8	1 1/2	13/32	•	•	•
9/16	IM180A	IMD180A	7/8	29/32	7/8	1 1/2	13/32	•	•	•
5/8	IM200	IMD200	15/16	1	7/8	1 1/2	15/32	•	•	•
11/16	IM220	IMD220	1 1/16	1 1/16	3/4	1 1/2	1/2	•	•	•
3/4	IM240	IMD240	1 1/8	1 1/8	3/4	1 1/2	1/2	•	•	•
13/16	IM260	IMD260	1 1/4	1 1/4	3/4	1 1/2	1/2	•	•	
7/8	IM280	IMD280	1 5/16	1 5/16	13/16	1 1/2	9/16	•	•	
15/16	IM300	IMD300	1 3/8	1 3/8	1 1/16	1 3/4	3/4	•	•	
1	IM320	IMD320	1 7/16	1 7/16	1 1/16	1 3/4	3/4	•	•	
1 1/16	IM340	–	1 9/16	1 9/16	1	2	13/16			
1 1/8	IM360	IMD360	1 5/8	1 5/8	1	2	13/16		•	
1 3/16	IM380	–	1 11/16	1 1/2	1 3/32	2	13/16			
1 1/4	IM400	IMD400	1 3/4	1 1/2	1 5/32	2	13/16		•	
1 5/16	IM420H	–	1 7/8	1 1/2	1 3/8	2	7/8			
1 3/8	IM440	–	1 15/16	1 1/2	1 3/8	2	7/8			
1 7/16	IM460	–	2	1 1/2	1 3/8	2	15/16			
1 1/2	IM480	–	2 1/8	1 9/16	1 3/8	2	15/16			
1 9/16	IM500	–	2 1/4	1 5/8	1 11/16	2 5/16	15/16			

Los juegos que se muestran incluyen una bandeja de almacenamiento

312IMMS

IMMS240

Semiprofundo, mm

mm	6	A	B	D	E	El juego contiene: 312IMMS 6
15	IMMS150	23.7	23.7	55.9	10.7	•
16	IMMS160	24.4	24.4	55.9	11.9	•
17	IMMS170	25.3	25.3	55.9	11.2	•
18	IMMS180	26.8	26.8	55.9	12.7	•
19	IMMS190	28.5	28.5	55.9	14.2	•
20	IMMS200	30.0	30.0	55.9	14.2	•
21	IMMS210	31.6	31.6	55.9	14.2	•
22	IMMS220	33.2	33.2	60.4	14.2	•
23	IMMS230	34.0	34.0	60.4	16.2	•
24	IMMS240	34.9	34.9	60.4	15.5	•
25	IMMS250	36.3	36.3	60.4	16.2	•
27	IMMS270	39.6	39.6	60.4	20.3	•

El juego que se muestra incluye una bandeja de almacenamiento

⚠ ADVERTENCIA • Lea las precauciones de seguridad en las páginas W1 a W4

DADOS DE IMPACTO FLANK DRIVE®

315SIMMYA

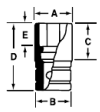

Profundo, mm

mm	6	12	A	B	C	D	E	El juego contiene: 305SIMMY 6	310SIMMYA 6	310SIMMADDON 6	312SIMM 6	315SIMMYA 6	325SIMM 6	312SIMDM 12
10	SIMM100A	SIMDM100	15.0	23.2	66.7	82.6	7.9		•			•	•	
11	SIMM110A	SIMDM110	18.2	23.2	66.7	82.6	8.7		•			•	•	
12	SIMM120A	SIMDM120	19.0	23.2	66.7	82.6	9.5		•			•	•	
13	SIMM130A	SIMDM130	20.6	23.2	66.7	82.6	10.3		•			•	•	
14	SIMM140A	SIMDM140	22.2	23.2	66.7	82.6	10.3		•			•	•	
15	SIMM150A	SIMDM150	23.8	23.8	50.0	82.6	10.3		•		•	•	•	•
16	SIMM160A	SIMDM160	24.6	24.6	50.0	82.6	11.9		•		•	•	•	•
17	SIMM170	SIMDM170	25.1	25.1	57.9	82.6	11.2		•		•	•	•	•
18	SIMM180	SIMDM180	26.7	26.7	61.0	82.6	12.7		•		•	•	•	•
19	SIMM190	SIMDM190	28.3	28.3	61.0	82.6	14.2		•		•	•	•	•
20	SIMM200	SIMDM200	29.9	29.9	61.0	82.6	14.2				•	•	•	•
21	SIMM210	SIMDM210	31.5	31.5	61.0	82.6	14.2				•	•	•	•
22	SIMM220	SIMDM220	33.1	33.1	71.6	88.9	15.7				•	•	•	•
23	SIMM230	SIMDM230	33.1	33.1	64.3	88.9	15.9				•	•	•	•
24	SIMM240	SIMDM240	34.9	34.9	63.5	88.9	15.9				•	•	•	•
25	SIMM250	SIMDM250	36.3	36.3	63.5	88.9	15.9			•	•		•	•
26	SIMM260	–	37.9	37.9	71.0	88.9	19.8			•			•	
27	SIMM270	SIMDM270	39.4	39.4	71.0	88.9	20.3			•	•		•	•
28	SIMM280A	–	41.0	41.0	71.0	88.9	20.8							
29	SIMM290	SIMDM290	41.3	41.3	71.6	88.9	21.3	•		•			•	
30	SIMM300	SIMDM300	42.9	42.9	71.6	88.9	21.6	•		•			•	
32	SIMM320	SIMDM320	45.8	45.8	71.6	88.9	22.4			•			•	
33	SIMM330	SIMDM330	46.0	46.0	72.8	88.9	22.4			•			•	
34	SIMM340	SIMDM340	49.3	49.3	72.8	88.9	22.6	•		•			•	
35	SIMM350	SIMDM350	50.8	50.8	72.8	88.9	22.9	•		•			•	
36	SIMM360	SIMDM360	50.8	50.8	72.8	88.9	22.9	•		•			•	

Los juegos que se muestran incluyen una bandeja de almacenamiento

313SIMA

Profundo, pulgadas

in	6	12	A	B	C	D	E	El juego contiene: 309SIMYA 6	313SIMA 6	320SIM* 6	313SIMD 12
3/8	SIM120A	–	19/32	29/32	2 5/8	3 1/4	5/16			•	
7/16	SIM140A	–	23/32	29/32	2 5/8	3 1/4	11/32			•	
1/2	SIM160A	SIMD160A	13/16	29/32	2 5/8	3 1/4	3/8	•	•	•	•
9/16	SIM180A	SIMD180A	7/8	29/32	2 5/8	3 1/4	13/32	•	•	•	•
5/8	SIM200	SIMD200A	31/32	29/32	2 5/8	3 1/4	15/32	•	•	•	•
11/16	SIM220	SIMD220A	1 1/16	1 1/16	2 5/8	3 1/4	1/2	•	•	•	•
3/4	SIM240	SIMD240A	1 1/8	1 1/8	2 5/8	3 1/4	9/16	•	•	•	•
13/16	SIM260	SIMD260A	1 1/4	1 1/4	2 5/8	3 1/4	19/32	•	•	•	•
7/8	SIM280	SIMD280A	1 5/16	1 5/16	2 3/32	3 1/2	9/16	•	•	•	•
15/16	SIM300	SIMD300A	1 3/8	1 3/8	2 3/32	3 1/2	3/4	•	•	•	•
1	SIM320	SIMD320A	1 7/16	1 7/16	2 7/8	3 1/2	3/4	•	•	•	•
1 1/16	SIM340	SIMD340A	1 9/16	1 9/16	2 11/16	3 1/2	25/32		•	•	•
1 1/8	SIM360	SIMD360A	1 5/8	1 5/8	2 11/16	3 1/2	25/32		•	•	•
1 3/16	SIM380	SIMD380A	1 11/16	1 1/2	2 11/16	3 1/2	25/32		•	•	•
1 1/4	SIM400	SIMD400A	1 3/4	1 1/2	2 11/16	3 1/2	1		•	•	•
1 5/16	SIM420H	–	1 7/8	1 1/2	2 11/16	3 1/2	15/16			•	
1 3/8	SIM440	–	2	1 1/2	2 11/16	3 1/2	15/16			•	
1 7/16	SIM460	–	2	1 1/2	2 21/32	3 1/2	15/16			•	
1 1/2	SIM480	–	2 1/8	1 9/16	2 5/8	3 1/2	15/16			•	
1 9/16	SIM500	–	2 1/4	1 5/8	2 5/8	3 1/2	15/16			•	
1 5/8	SIM520	–	2 3/8	1 3/4	2 7/8	3 1/2	15/16				

Los juegos que se muestran incluyen una bandeja de almacenamiento salvo que se indique lo contrario
*No incluye bandeja de almacenamiento

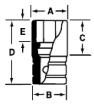

Poco profundo de pared delgada, pulgadas

311IMFSY

El juego contiene: 311IMFSY

	6	A	B	C	D	E	6
3/8	IMFS120	19/32	7/8	3/8	1 1/2	7/32	•
7/16	IMFS140	11/16	7/8	9/16	1 1/2	11/32	•
1/2	IMFS160	3/4	7/8	5/8	1 1/2	3/8	•
9/16	IMFS180	13/16	7/8	11/16	1 1/2	13/32	•
5/8	IMFS200	29/32	29/32	3/4	1 1/2	15/32	•
11/16	IMFS220	1	1	13/16	1 1/2	1/2	•
3/4	IMFS240	1 1/16	1 1/16	13/16	1 1/2	1/2	•
13/16	IMFS260	1 1/8	1 1/8	25/32	1 1/2	1/2	•
7/8	IMFS280	1 7/32	1 7/32	29/32	1 1/2	9/16	•
15/16	IMFS300	1 5/16	1 5/16	1 3/16	1 17/32	3/4	•
1	IMFS320	1 3/8	1 3/8	1 3/16	1 9/16	3/4	•
1 1/16	IMFS340	1 7/16	1 7/16	1 1/4	1 11/16	13/16	
1 1/8	IMFS360	1 1/2	1 1/2	1 1/4	1 3/4	13/16	
1 3/16	IMFS380	1 5/8	1 5/8	1 1/4	1 3/4	13/16	
1 1/4	IMFS400	1 11/16	1 11/16	1 1/4	1 7/8	13/16	
1 5/16	IMFS420	1 3/4	1 3/4	1 1/4	1 7/8	13/16	
1 3/8	IMFS440	1 13/16	1 13/16	1 1/4	2 1/16	13/16	
1 7/16	IMFS460	1 29/32	1 29/32	1 3/8	2 1/16	13/16	
1 1/2	IMFS480	2	2	1 3/8	2 1/16	13/16	

El juego que se muestra incluye una bandeja de almacenamiento

Extra profundo, mm

SIMML180

mm	6	A	B	C	D	E
15	SIMML150	23.2	26.4	110.2	127.0	10.7
18	SIMML180	26.8	26.8	54.8	127.0	12.7
21	SIMML210	31.6	31.6	108.0	127.0	14.2

SIMML180 Dado de impacto métrico extra profundo de 6 ptas.

- Para extraer e instalar las cintas de sujeción del tanque de combustible del chasis International® 4400. El tanque de combustible debe extraerse para reemplazar la unidad de envío de combustible.
- 5" de largo para atravesar el armazón y acceder al sujetador sin la necesidad de una extensión

SIML200

Extra profundo, pulgadas

- Se utiliza para extraer o reemplazar tuercas de cinta de retención en los tanques de combustible
- También tiene aplicaciones en tuercas de ajuste de frenos de emergencia y retenedores estabilizantes

	6	A	B	C	D	E
1/2	SIML160*	25/32	15/16	4 1/4	5	3/8
9/16	SIML180	7/8	15/16	4 1/4	5	13/32
5/8	SIML200	31/32	1	4 1/4	5	15/32
11/16	SIML220	1 1/16	1 1/16	4 1/4	5	1/2
3/4	SIML240	1 1/8	1 1/8	4 1/4	5	9/16
13/16	SIML260	1 1/4	1 1/4	4 1/4	5	19/32
7/8	SIML280	1 5/16	1 5/16	4 1/4	5	21/32
15/16	SIML300	1 3/8	1 3/8	4 1/4	5	23/32
1	SIML320	1 7/16	1 7/16	4 3/8	5	3/4
1 1/16	SIML340	1 9/16	1 9/16	4 3/8	5	25/32
1 1/8	SIML360	1 5/8	1 5/8	4 3/8	5	25/32

*ASME®/ANSI® B107.2

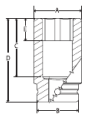

Profundo de pared delgada, mm

SIMM360TW

mm	Pieza N.º	A	B	C	D	E
36	SIMM360TW	47.2	44.5	70.4	88.9	22.9

SIMM360TW Dado de tuerca de eje

- El diseño de pared delgada brinda el espacio extra necesario para extraer e instalar la tuerca de eje en los vehículos Chevrolet® Sonic

SIMMF21A

Extra profundo/pared delgada, mm

Los dados son un 34 % más delgados que los dados de pared delgada estándar. Utilícelos para acceder a la tuerca de espárragos largos y de otras áreas difíciles de alcanzar. Ideal para ruedas.

mm	6	A	B	C	D	E
14	SIMMF14A	20.6	23.8	50.8	76.2	25.4
17	SIMMF17A	23.8	23.8	50.8	76.2	25.4
19	SIMMF19A	25.4	25.4	50.8	76.2	25.4
21	SIMMF21A	28.6	28.6	50.8	76.2	25.4
22	SIMMF22A	30.2	30.2	50.8	76.2	25.4

⚠ ADVERTENCIA

• Lea las precauciones de seguridad en las páginas W1 a W4

DADOS DE IMPACTO GIRATORIOS FLANK DRIVE®

307IPLMY

IPDLM12

Giratorio poco profundo, mm

El juego contiene: 307IPLMY | 312IPLM

mm	6	12	A	B	D	E	6	6
10	IPLM10C	–	15.6	23.8	73.7	9.7		•
11	IPLM11C	–	17.8	23.8	73.7	9.7		•
12	IPLM12C	IPDLM12	18.9	23.8	73.7	9.7		•
13	IPLM13C	IPDLM13A	19.7	23.8	73.7	8.6		•
14	IPLM14C	–	21.3	23.8	73.7	8.6	•	•
15	IPLM15C	–	22.6	23.8	73.7	8.6	•	•
16	IPLM16C	IPDLM16A	24.1	30.2	77.8	10.4		•
17	IPLM17C	IPDLM17A	25.6	30.2	77.7	10.4	•	•
18	IPLM18C	IPDLM18A	26.7	30.2	77.7	10.4	•	•
19	IPLM19C	–	28.3	30.2	77.7	11.2	•	•
21	IPLM21C	–	31.5	30.2	77.7	12.7	•	•
22	IPLM22C	–	33.1	30.2	77.8	14.2		
24	IPLM24C	–	34.8	30.2	81.0	15.0	•	•

Los juegos que se muestran incluyen una bandeja de almacenamiento

307IPLY

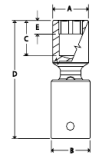

Giratorio poco profundo, pulgadas

El juego contiene: 307IPLY | 312IPL

11	6	12	A	B	D	E	6	6
1/2	IPL16C	IPDL16	25/32	1 1/16	2 29/32	11/32		•
9/16	IPL18C	–	7/8	1 1/16	2 29/32	11/32	•	•
5/8	IPL20C	IPDL20	31/32	1 1/16	2 31/32	11/32	•	•
11/16	IPL22C	–	1 1/16	1 1/4	3 1/16	7/16	•	•
3/4	IPL24C	–	1 1/8	1 1/4	3 1/16	15/32	•	•
13/16	IPL26C	–	1 3/16	1 1/4	3 1/16	1/2		•
7/8	IPL28C	–	1 9/32	1 1/4	3 7/32	9/16	•	•
15/16	IPL30C	–	1 11/32	1 1/4	3 7/32	5/8	•	•
1	IPL32C	–	1 11/32	1 1/4	3 3/16	11/16		•
1 1/16	IPL34C	–	1 7/16	1 1/4	3 7/32	23/32		•
1 1/8	IPL36C	–	1 9/16	1 1/4	3 11/32	3/4	•	•
1 3/16	IPL38C	–	1 9/16	1 1/4	3 3/8	3/4		•
1 1/4	IPL40C	–	1 5/8	1 1/4	3 7/16	13/16		
1 5/16	IPL42C	–	1 3/4	1 1/4	3 7/16	7/8		

Los juegos que se muestran incluyen una bandeja de almacenamiento

Giratorio semiprofundo, mm

IPSM21

mm	6	A	B	C	D	E
15	IPSM15	23.0	25.1	—	86.4	12.4
18	IPSM18	26.5	31.5	—	89.1	12.7
21	IPSM21	30.0	31.5	33.8	89.2	12.7
22	IPSM22	32.4	31.5	—	89.1	12.7

IPSM21 Dado giratorio métrico semiprofundo de impacto
Diseñado para pernos del brazo de control superior de GM® y Ford®. Un pasador pivote soldado refuerza la pared del dado y permite una acción suave ininterrumpida de 30° para alcanzar una transferencia de potencia más eficiente en cualquier ángulo.

Giratorio profundo, pulgadas

SIP18A

11	6	A	B	D	E
9/16	SIP18A	13/16	1 3/16	3 13/16	11/32
3/4	SIP24A	1 1/32	1 3/16	4 1/4	7/16

DADOS DE IMPACTO PARA APLICACIONES ESPECIALES

TORX®, impacto

IMSLE240

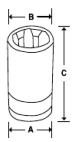

#	Pieza N.º	A	B	D
E18	IMSLE180	29/32	29/32	1 1/2
E20	IMSLE200	15/16	15/16	1 1/2
E24	IMSLE240	1 1/16	1 1/16	1 1/2

IMSLE240 Dado de impacto *TORX*
- Tuerca del eje delantero en vehículos Mercedes® clases M, C, E y S

305TTWYA

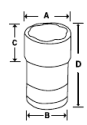

Giratorio/poco profundo, pulgadas

Extrae los sujetadores redondeados/dañados

11	Pieza N.º	A	B	C	D
3/4	TTWY241A	1 1/32	1	1	1 5/8
13/16	TTWY261A	1 1/8	1	1	1 5/8
7/8	TTWY281A	1 3/16	1 1/16	1	1 5/8
15/16	TTWY301A	1 1/4	1 3/16	1	1 5/8
1	TTWY321A	1 5/16	1 1/4	1	1 5/8

305TTWYA Juego poco profundo de torsión
TTWY241A–TTWY321A (5 pzas.) (3/4"–1")

SPS10 vehículos Ford de último modelo

Pasador de grillete

Diseñado con configuración oval para el mantenimiento de pasadores de grilletes en camiones medianos International Harvester® y Kenworth®.

SPS10 41/64" x 1 3/32" x 1 3/4" de largo

SPS11 21/32" x 1 17/32" x 1 3/4" de largo

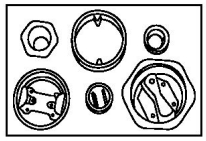

A172A

Dado de tapón del tambor

A172A Un dado extrae prácticamente todos los tapones y tapas de tambor giratorios, ya sean grandes o pequeños. La llave interior cargada con resorte funciona con tapones más pequeños y queda automáticamente embutida cuando se extraen tapones más grandes. Se utiliza con un trinquete o llave de impacto con cuadro de 1/2".

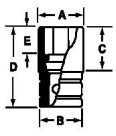

DPSM16

Poco profundo de 10 ptas., mm

mm	10	A	B	D	E
16	DPSM16	24.6	24.6	38.1	11.9

DPSM16 Dado de impacto poco profundo

- El DPSM16 es para extraer los pernos del brazo de control inferior trasero en los vehículo Honda® Civic® y Acura® RSX de 2001 y más nuevos
- Forjado con aleación de acero fuerte
- Tratados térmicamente a una dureza inferior para añadir resistencia al impacto y ductilidad

S6324

Dado de impacto para perno de cigüeñal, mm

S6324 Dado para perno de cigüeñal

- Para extraer e instalar los pernos de cigüeñal en los vehículos Audi® A4®, A6® y A8®
- El dado es de 24 mm, tiene un cuadro de 1/2" y el largo general es de 2", lo que es fundamental para la aplicación de pernos de cigüeñal
- Fabricados con acero de aleación especial
- Forjados con precisión y con tratamiento térmico para otorgar máxima potencia y durabilidad
- El sistema de llaves Flank Drive® sostiene los sujetadores en los costados/planos, lo que aumenta el toque entre un 15 % y 20 %, evita que el sujetador se gaste y aumenta la vida útil del dado

ACCESORIOS DE POTENCIA

PS2

Extensiones de retención con botón de traba

Pieza N.º	A	B
PS2	5/8	2
PS3	5/8	3 1/2
PS5	5/8	5
PS10	5/8	10

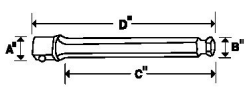

A3011A

Vástago hexagonal (de potencia)

Pieza N.º	Enganche del dado	A	B	C	D
A3011A	Tipo pasador	1/2	7/16	1 1/4	2 3/4

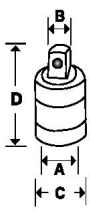

PA2A

Adaptadores (de potencia)

Pieza N.º	Enganche del dado	A	B	C	D
PA2A	Tipo pasador	3/8	1/2	3/4	1 5/16
PA4E	Tipo pasador	1/2	3/8	15/16	1 13/16

⚠ ADVERTENCIA

- No use herramientas de potencia cromadas o de acabado industrial con mangos de impacto
- No use herramientas de potencia de acabado industrial con mangos de impacto
- Lea las precauciones de seguridad en las páginas W1 a W4

DADOS DE POTENCIA

SPM19

P412

SIPR426

SIPRL436

MPK121A

Flank Drive® profundo, mm

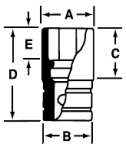

mm	6	A	B	C	D	E
17	SPM17	24.6	24.6	66.6	82.6	12.7
19	SPM19	26.4	26.4	64.8	82.6	11.9
21	SPM21	28.3	28.3	64.8	82.6	12.3

Cuadrado doble poco profundo, pulgadas

11	8	A	B	C	D	E
3/8	P412	13/32	7/8	7/8	1 1/2	5/16
7/16	P414	13/16	15/16	7/8	1 1/2	3/8
1/2	P416	29/32	1	7/8	1 1/2	5/16
9/16	P418	1	1 1/8	7/8	1 1/2	1/2
5/8	P420	1 3/32	1 3/16	7/8	1 1/2	1/2
11/16	P422	1 7/32	1 1/4	7/8	1 1/2	13/32
3/4	P424	1 5/16	1 3/8	7/8	1 1/2	9/16
13/16	P426	1 7/16	1 7/16	7/8	1 1/2	5/8
7/8	P428	1 1/2	1 1/2	1 1/32	1 3/4	5/8
1	P432	1 23/32	1 3/4	1 1/8	1 3/4	3/4

Cuadrado doble profundo, pulgadas

11	8	A	B	C	D	E
13/16	SIPR426	1 7/16	1 3/8	2 9/16	3 1/4	5/8
1	SIPR432	1 3/4	1 1/2	2 11/16	3 1/2	3/4
1 1/8	SIPR436	1 15/16	1 51/64	2 23/32	3 1/2	27/32

Cuadrado doble extra profundo, pulgadas

11	8	A	B	C	D	E
1 1/8	SIPRL436	1 15/16	1 1/2	4 13/32	5	27/32

Flank Drive/magnético, pulgadas

11	6	A	B	D	E
3/8	MPK121A	19/32	7/8	1 1/2	1/8
7/16	MPK141A	11/16	7/8	1 1/2	5/32
1/2	MPK161A	25/32	15/16	1 1/2	5/32
9/16	MPK181A	7/8	15/16	1 1/2	5/32

DADOS PARA BROCAS DE POTENCIA

PFTX50E

TORX®/mangos de potencia

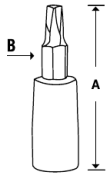

#	Pieza N.º	A	B
T45	PSTX45E	2 7/16	FTX45E2
T50	PSTX50E	2 7/16	FTX50E2
T50	PSTX500E*	2 7/16	FTX500E2
T55	PSTX55E	2 7/16	FTX55E2

* Estilo GM®

Hex., pulgadas (de potencia)

		A	B
5/16	PSA10E	2 7/16	FA10E2
3/8	PSA12E	2 9/16	SA12E2
7/16	PSA14E	2 7/8	SA14E2
1/2	PSA16E	3 1/16	SA16E2
9/16	PSA18E	3 1/8	SA18E2
5/8	PSA20E	3 7/16	LAW120E2
3/4	PSA24E	4 1/16	LAW124E2

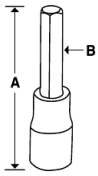

PSA10E

Cuadro de superficie poco profundo, mm

mm	6	A	B	C	D	E
15	DTM15A	22.3	22.9	21.3	38.1	10.7

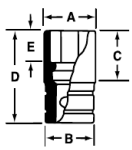

DTM15A

Cuadro de superficie profundo, mm

Los dados con cuadros de superficie se enganchan en un sujetador mientras giran sobre una punta de fuerza para tuercas.

mm	6	A	B	C	D	E
13	DTSM13A	19.3	21.8	65.8	82.6	10.2
15	DTSM15A	22.3	21.8	65.8	82.6	10.7

DTSM13A

Cuadro de superficie profundo, pulgadas

	6	A	B	C	D	E
1/2	DTS16A	3/4	29/32	2 19/32	3 1/4	13/32
9/16	DTS18A	13/16	29/32	2 19/32	3 1/4	13/32

DTS16A

Cuadro de superficie (serie M)

- Los dados Snap-on® de la serie M ofrecen un calce preciso, máxima dureza y durabilidad, y una ranura para anillo y agujero pasador para usar en una variedad de aplicaciones de sujeción industrial
- Los dados de la serie M también tienen tecnología de dado de superficie para garantizar una larga vida útil

mm	6	A	B	C	D	E
11	M3111	16.6	23.6	19.1	38.1	8.1
13	M3113	22.0	23.6	19.1	38.1	9.7
15	M3115	23.6	23.6	21.3	38.1	12.4
15	M3215	23.6	23.6	40.4	57.2	12.4
18	M3118	28.4	28.4	21.3	38.1	11.2

M3115

⚠ ADVERTENCIA

- No use herramientas de mano cromadas o de acabado industrial con mangos de impacto
- Lea las precauciones de seguridad en las páginas W1 a W4

CUANDO LA TAREA SE VUELVE DIFÍCIL, LOS TÉCNICOS RECURREN A SNAP-ON.

A veces, en especial cuando se trata de maquinaria y vehículos de servicio pesado, mientras más grandes son, más difícil es el trabajo. Por esa razón, para las tareas duras, Snap-on diseñó herramientas resistentes.

NUESTRA FORTALEZA.

En Snap-on, somos expertos en fabricar herramientas resistentes y nuestras herramientas con cuadro de 3/4" no son la excepción. Fabricadas con acero con contenido de aleación, estas herramientas son más fuertes, más duraderas y están fabricadas para realizar cualquier trabajo.

CONSTRUIDAS PARA OFRECER UN MÁXIMO RENDIMIENTO.

Estas herramientas no son solo decorativas. El espesor uniforme de la pared ofrece mayor acceso y mejor rendimiento cuando usted más lo necesita.

DADOS DE IMPACTO FLANK DRIVE®

IMM302

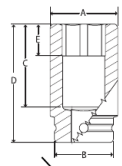

Poco profundo, mm

mm	6	12	A	B	C	D	E	El juego contiene: 425IMM 6
17	IMM172A	–	29.2	41.1	27.2	50.8	13.7	•
18	IMM182A	–	31.6	41.1	27.2	50.8	12.7	•
19	IMM192A	–	31.8	41.1	27.2	50.8	13.7	•
20	IMM202A	IMMD202B	35.1	41.1	27.2	50.8	14.0	•
21	IMM212A	–	34.9	41.1	27.2	50.8	15.2	•
22	IMM222A	–	38.1	41.1	27.2	50.8	15.2	•
23	IMM232A	–	36.3	41.1	27.2	50.8	16.5	•
24	IMM242A	–	39.5	41.1	26.4	50.8	16.5	•
25	IMM252A	–	39.6	41.1	26.4	50.8	16.3	•
26	IMM262A	–	39.6	41.1	26.4	50.8	17.5	•
27	IMM272A	–	42.6	41.1	26.4	50.8	19.0	•
28	IMM282	–	44.7	41.1	32.8	57.2	17.5	•
29	IMM292	–	46.0	41.1	32.8	57.2	18.0	•
30	IMM302	–	47.0	44.5	32.8	57.2	19.1	•

mm	6	12	A	B	C	D	E	El juego contiene: 425IMM 6
31	IMM312	–	49.2	44.5	32.8	57.2	19.1	•
32	IMM322	–	50.8	44.5	32.8	57.2	20.6	•
33	IMM332	–	50.8	44.5	32.8	57.2	20.3	•
34	IMM342	–	50.8	44.5	32.8	57.2	22.4	•
35	IMM352	–	54.0	44.5	32.8	57.2	22.4	•
36	IMM362	–	54.0	44.5	32.8	57.2	22.4	•
38	IMM382	–	57.2	44.5	32.8	57.2	23.9	•
40	IMM402	–	59.7	44.5	45.5	69.9	28.4	•
41	IMM412	–	60.5	44.5	33.5	57.2	26.2	•
42	IMM422A	–	63.1	44.5	46.9	66.9	28.6	
46	IMM462	–	66.7	44.5	45.5	69.9	29.0	•
50	IMM502	–	71.4	44.5	52.6	76.2	31.0	•

IMMD202B Dado de impacto poco profundo métrico de 12 ptas. Las aplicaciones específicas incluyen la extracción de los pernos de cabeza de los motores Caterpillar® C7, C8, C9 y C10.

Poco profundo, pulgadas

IM402

IMD302A

	6	12	A	B	C	D	E	El juego contiene: 429IM 6	417IM 6	418IM 6	429IMD 12	417IMD 12	418IMD 12
9/16	IM182A	IMD182A	1	1 5/8	1	1 3/4	7/16	•			•		
5/8	IM202A	IMD202A*	1 3/32	1 5/8	1	1 3/4	1/2	•			•		
11/16	IM222A	IMD222A	1 5/32	1 5/8	1	1 3/4	9/16	•			•		
3/4	IM242A	IMD242A	1 1/4	1 5/8	1	1 3/4	9/16	•	•		•	•	
13/16	IM262A	IMD262A	1 3/8	1 5/8	1 1/8	1 7/8	5/8	•	•		•	•	
7/8	IM282A	IMD282A	1 1/2	1 5/8	1 1/8	1 7/8	5/8	•	•		•	•	
15/16	IM302A	IMD302A*	1 9/16	1 5/8	1 1/8	1 7/8	3/4	•	•		•	•	
1	IM322A	IMD322A*	1 5/8	1 5/8	1 1/4	2	3/4	•	•		•	•	
1 1/16	IM342A	IMD342A	1 11/16	1 5/8	1 1/4	2	3/4	•	•		•	•	
1 1/8	IM362	IMD362A	1 7/8	1 5/8	1 3/8	2 1/8	3/4	•	•		•	•	
1 3/16	IM382	IMD382	1 7/8	1 5/8	1 5/16	2 1/8	3/4	•	•		•	•	
1 1/4	IM402	IMD402	2	1 3/4	1 3/8	2 1/8	13/16	•	•	•	•	•	•
1 5/16	IM422	IMD422	2 1/8	1 3/4	1 1/2	2 1/4	7/8	•	•	•	•	•	•
1 3/8	IM442	IMD442	2 1/8	1 3/4	1 1/2	2 1/4	7/8	•	•	•	•	•	•
1 7/16	IM462	IMD462	2 1/4	1 3/4	1 1/2	2 1/4	7/8	•	•	•	•	•	•
1 1/2	IM482	IMD482	2 1/4	1 3/4	1 1/2	2 1/4	15/16	•	•	•	•	•	•
1 9/16	IM502	IMD502	2 7/16	1 3/4	1 9/16	2 3/8	15/16	•	•	•	•	•	•
1 5/8	IM522	IMD522	2 7/16	1 3/4	1 5/8	2 3/8	7/8	•	•	•	•	•	•
1 11/16	IM542	IMD542	2 1/2	1 3/4	1 13/16	2 9/16	1	•	•	•	•	•	•
1 3/4	IM562	IMD562	2 1/2	1 3/4	1 13/16	2 9/16	1	•	•	•	•	•	•
1 13/16	IM582	IMD582	2 5/8	1 3/4	1 5/8	2 5/8	1 1/4	•		•	•		•
1 7/8	IM602	IMD602	2 5/8	1 3/4	1 3/4	2 3/4	1 1/8	•		•	•		•
1 15/16	IM622A	IMD622	2 3/4	1 3/4	1 9/16	2 27/32	1 3/32	•		•	•		•
2	IM642A	IMD642	2 7/8	1 3/4	1 15/16	2 7/8	1 1/8	•		•	•		•
2 1/16	IM662A	IMD662	3	1 3/4	1 7/8	2 7/8	1 3/16	•		•	•		•
2 1/8	IM682A	IMD682	3	1 3/4	1 3/4	3	1 1/4	•		•	•		•
2 3/16	IM702A	IMD702	3 1/4	1 3/4	2 3/16	3 3/16	1 5/16	•		•	•		•
2 1/4	IM722A	IMD722	3 1/4	1 3/4	2 3/16	3 3/16	1 3/8	•		•	•		•
2 3/8	IM762A	IMD762	3 1/2	1 3/4	2 3/8	3 1/2	1 7/16	•		•	•		•

*Las aplicaciones incluyen la reparación de camiones de servicio pesado y equipos fuera de ruta la mayoría de los motores diesel, incluidos *Caterpillar* y Cummins® más pernos de cabeza y pernos de tapas de cojinetes.

IMD242A Aplicaciones: La mayoría de los pernos de cabeza de *Caterpillar*, pernos de las tapas de cojinetes principales de Detroit Diesel®, y pernos de cabeza de *Cummins* K19.

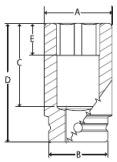

SIMDM212

Profundo, mm

mm	6	12	A	B	C	D	E
17	SIMM172	–	28.9	41.1	52.6	76.2	12.7
18	SIMM182	–	31.7	41.3	76.2	101.6	12.7
19	SIMM192	–	32.4	41.1	51.8	76.2	14.2
21	SIMM212	SIMDM212	34.2 (33.3)	41.1 (41.3)	37.4 (19)	76.2	14.2 (18.3)
22	SIMM222	–	35.8	41.1	37.4	76.2	14.2
23	SIMM232	–	35.8	41.1	37.2	76.2	16.3
24	SIMM242	–	37.7	41.1	37.0	76.2	16.5
26	SIMM262	–	39.6	41.1	36.7	76.2	16.3
27	SIMM272	–	42.8	41.1	38.4	76.2	19.1
30	SIMM302	–	46.8	41.1	58.2	82.6	18.5
32	SIMM322	–	50.8	44.5	58.9	82.6	19.1
33	SIMM332	–	52.4	44.5	57.4	82.6	22.4
35	SIMM352	–	52.7	44.5	57.2	82.6	21.6
36	SIMM362	–	54.0	44.5	62.5	88.9	22.9
38	SIMM382	–	57.2	44.5	65.3	88.9	23.8
41	SIMM412*	–	55.1	44.5	74.9	100.1	26.7
46	SIMM462	–	76.7	44.5	72.4	101.6	29.1

*Las aplicaciones incluyen el uso en ruedas con guía de pernos estilo Budd.

Las dimensiones entre ( ) se aplican solo a los dados de 12 puntas.

SIMDM212 Aplicación: Pernos de volante en motores Cummins® ISX.

423SIM

Profundo, pulgadas

							El juego contiene: 423SIM
11	6	A	B	C	D	E	6
9/16	SIM182	1	1 5/8	2 1/16	3	9/16	•
5/8	SIM202	1 1/16	1 5/8	2 1/16	3	9/16	•
11/16	SIM222	1 1/8	1 5/8	2 1/16	3	9/16	•
3/4	SIM242	1 1/4	1 5/8	2	3	9/16	•
13/16	SIM262	1 3/8	1 5/8	2	3	5/8	•
7/8	SIM282	1 1/2	1 5/8	2	3	5/8	•
15/16	SIM302	1 5/8	1 5/8	2	3	5/8	•
1	SIM322	1 5/8	1 5/8	2	3	11/16	•
1 1/16	SIM342	1 3/4	1 5/8	2	3	11/16	•
1 1/8	SIM362	1 3/4	1 5/8	2	3	3/4	•
1 3/16	SIM382	2	1 3/4	2 1/4	3 1/4	3/4	•
1 1/4	SIM402	2	1 3/4	2 1/4	3 1/4	7/8	•
1 5/16	SIM422	2 1/8	1 3/4	2 9/16	3 1/4	7/8	•
1 3/8	SIM442	2 1/8	1 3/4	2 1/4	3 1/4	7/8	•
1 7/16	SIM462	2 3/16	1 3/4	2 1/2	3 1/2	7/8	•
1 1/2	SIM482	2 1/4	1 3/4	2 1/2	3 1/2	15/16	•
1 9/16	SIM502	2 5/16	1 3/4	2 1/2	3 1/2	15/16	•
1 5/8	SIM522	2 7/16	1 3/4	2 1/2	3 1/2	15/16	•
1 11/16	SIM542	2 1/2	1 3/4	2 1/2	3 1/2	1	•
1 3/4	SIM562	2 1/2	1 3/4	2 1/2	3 1/2	1	•
1 13/16	SIM582	2 5/8	1 3/4	2 3/4	3 3/4	1 1/16	•
1 7/8	SIM602	2 11/16	1 3/4	2 3/4	3 3/4	1 1/8	•
2	SIM642A	2 13/16	1 3/4	2 3/4	3 3/4	1 1/8	•

Tamaños más grandes disponibles por pedido especial.

ADVERTENCIA • Lea las precauciones de seguridad en las páginas W1 a W4

DADOS DE IMPACTO FLANK DRIVE®

SIMML242

Extra profundo, mm

mm	6	A	B	C	D	E
24	SIMML242	39.5	38.1	101.6	127	16.5

SIMML242 Dado de impacto métrico extra profundo de 6 ptas.
- Para extraer e instalar los pernos de cabeza en los motores Cummins® ISX

IMM503TW

IMFS482A

Poco profundo de pared delgada, mm

mm	6	A	B	C	D	E
50	IMM503TW	65	57.2	49	82.6	3.71
55	IMM553TW	75.9	60.5	53.8	88.9	34.8

Poco profundo de pared delgada, pulgadas

	6	A	B	C	D	E
1 1/2	IMFS482A	54	44.4	36.6	63.5	24.1

IMFDL242

IMSLE242A

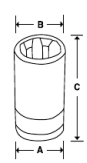

Profundo de pared delgada, pulgadas

	12	A	B	C	D	E
3/4	IMFDL242	1 3/8	1 5/8	4 3/4	5 3/4	1/2

Tamaños más grandes disponibles por pedido especial.

IMFDL242 Dado de impacto profundo de pared delgada
Diseñados para extraer los pernos de cabeza en los motores Caterpillar® C12, C15, C16 y 3406E donde los dos pernos de cabeza frontales y los dos posteriores están ubicados debajo de las tapas de las válvulas, en donde se requiere el uso de dados largos de pared delgada
- Las aplicaciones adicionales incluyen los pernos de tapas de cojinete principales de los motores Detroit Diesel® y los pernos de cabeza de 19 mm en motores Mercedes-Benz® MBE904/MBE906 EGR (2007 y posteriores)
- Tamaño de llave de 3/4", cuadro de 3/4", 5 3/4" de largo

TORX® invertido

#	Pieza N.º	A	B	C
E24	IMSLE242A	1 5/8	1 5/8	3 3/4

IMSLE242A Dado de impacto *TORX* invertido
- Para extraer e instalar los pernos de cabeza en los motores MaxxForce® 11 y 13 que se encuentran en los camiones International® D15 desde 2010 hasta la actualidad
- Usados para instalar pernos rompibles E24 durante la alineación de las suspensiones en los remolques Hendrickson® y Dayton®
- Fabricados con acero de aleación especial, forjados con precisión y con tratamiento térmico para otorgar máxima potencia y durabilidad

LAS HERRAMIENTAS MUESTRAN SU FUERZA.

Los trabajos grandes requieren fuerza de verdad. Por esa razón, cuando los técnicos necesitan más fuerza, recurren a nuestras herramientas con cuadros de 1" y 2 1/2". Cuando tiene una lista completa de operaciones de servicio pesado, como trabajar en semirremolques, equipos de construcción, sistemas hidráulicos u otros objetos de metal pesado, las herramientas con cuadro Snap-on® proporcionan justo el poder correcto. ¿Se enfrenta mano a mano contra algunos trabajos grandes? No se preocupe; le ayudaremos.

Flank Drive®: Nuestro sistema de llaves *Flank Drive* agarra los sujetadores en el plano, aumenta el torque y evita que las esquinas de los sujetadores se redondeen.

Dados de impacto: Fabricados con una combinación de acero de aleación, nuestros dados de impacto poseen una dureza tratada térmicamente menor que los dados manuales. Están fabricadas para soportar las cargas de ciclos repetidos de llaves de impacto neumáticas e inalámbricas. Además, los dados de impacto Snap-on *Flank Drive* superan las normas de rendimiento ANSI.

DADOS PARA BROCAS HEX.

IMA283

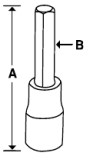

Hex. estándar, pulgadas

		A	B
7/8	IMA283	5 5/8	IMA238-2
1	IMA323	5 5/8	IMA323-2

ACCESORIOS DE IMPACTO

IM133

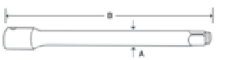

Extensiones con agujero pasador

Pieza N.º	A	B
IM133	1	3
IM63B	1 1/8	7 1/8
IM123	1 3/8	13 1/8

IP83

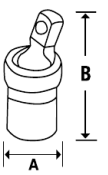

Junta universal giratoria con agujero pasador

Pieza N.º	A	B
IP83	2 1/2	4 3/16

IM35

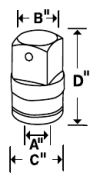

Adaptadores con agujero pasador

Pieza N.º	A	B	C	D
IM72	3/4	1 con agujero pasador	1 5/8	2 9/16
IM124B	1	3/4	2 3/8	2 13/16
IM35	1	1 1/2	2 1/4	3 1/2
IM53	1 1/2	1	3 1/4	4 1/4

Pasadores y anillos de traba para cuadro de 1"

IM243R

IM243P

Pieza N.º	Descripción	Usar con
IM483R	Pasador de traba de goma (usar con IM483P)	Todos los dados/accesorios con cuadro estriado más dados de cuadro de 1" desde 1 7/16" (35 mm)
IM243R	Anillo de traba de goma (usar con IM243P)	Dados/accesorios con cuadro de 1" hasta 1 3/8" (35 mm) más adaptador IM124
IM243P	Pasador de traba de acero (usar con IM243R)	Dados/accesorios con cuadro de 1" hasta 1 3/8" (35 mm)
IMR3	Retenedor de dado	Todos los dados/accesorios con cuadro de 1", Todos los dados/accesorios con cuadro estriado #5
IM483P	Pasador de traba de acero (usar con IM483R)	Todos los dados/accesorios con cuadro estriado más dados de cuadro de 1" desde 1 7/16" (35 mm)

Poco profundo, mm

IMM503

mm	6	A	B	C	D	E	El juego contiene: 516IMM 6
27	IMM273	44.5	53.8	27.0	57.2	17.5	•
30	IMM303	47.8	53.8	27.0	57.2	17.5	•
32	IMM323	50.8	53.8	33.3	63.5	19.1	•
33	IMM333	52.3	53.8	33.3	63.5	22.4	•
35	IMM353	53.8	53.8	33.5	63.5	22.4	•
36	IMM363	57.2	57.2	34.3	63.5	22.4	•
38	IMM383	59.7	57.2	40.1	69.9	23.6	•
41	IMM413A	59.9	57.2	39.6	69.9	26.4	•
46	IMM463	69.9	60.5	44.2	76.2	30.0	•
50	IMM503	69.9	60.5	49.3	82.6	31.2	•
55	IMM553	82.6	60.3	46.7	82.6	31.8	•
60	IMM603	88.9	57.2	51.6	88.9	38.1	•
65	IMM653	92.1	60.5	63.8	101.6	45.7	•
70	IMM703	95.3	60.5	62.2	101.6	45.7	•
75	IMM753	104.8	60.5	67.1	108.0	51.6	•
80	IMM803	108.7	61.1	65.9	108.7	47.6	•

Poco profundo, pulgadas

IM703

	6	A	B	C	D	E	El juego contiene: 521IM	516IM	522IM
3/4	IM243	1 7/16	2 1/8	1	2 1/8	11/16	•		
13/16	IM263	1 7/16	2 1/8	1	2 1/8	11/16	•		
7/8	IM283	1 1/2	2 1/8	1	2 1/8	11/16	•		
15/16	IM303	1 19/32	2 1/8	1	2 1/8	11/16	•		
1	IM323	1 11/16	2 1/8	1 1/16	2 1/4	11/16	•		
1 1/16	IM343	1 3/4	2 1/8	1 1/16	2 1/4	11/16	•		
1 1/8	IM363	1 7/8	2 1/8	1 1/16	2 1/4	11/16	•		
1 3/16	IM383	1 7/8	2 1/8	1 1/16	2 1/4	11/16	•		
1 1/4	IM403	2	2 1/8	1 3/16	2 3/8	3/4	•		
1 5/16	IM423	2 1/16	2 1/8	1 15/16	2 1/2	7/8	•		
1 3/8	IM443	2 1/8	2 1/8	1 15/16	2 1/2	7/8	•		
1 7/16	IM463	2 1/4	2 1/4	1 7/16	2 1/2	15/16	•		
1 1/2	IM483B	2 3/8	2 1/4	1 7/16	2 5/8	15/16	•		
1 9/16	IM503A	2 3/8	2 1/4	1 7/16	2 5/8	15/16	•		
1 5/8	IM523A	2 3/8	2 1/4	1 5/8	2 3/4	1 1/16	•		
1 11/16	IM543	2 9/16	2 3/8	1 5/8	2 3/4	1 1/16	•		
1 3/4	IM563	2 5/8	2 3/8	1 23/32	2 7/8	1 5/32	•		
1 13/16	IM583	2 3/4	2 3/8	1 23/32	2 15/16	1 3/16	•		
1 7/8	IM603	2 3/4	2 3/8	1 23/32	2 15/16	1 3/16	•		
1 15/16	IM623	2 3/4	2 3/8	1 23/32	2 15/16	1 3/16	•		
2	IM643	3	2 3/8	1 31/32	3 1/8	1 9/32	•		
2 1/16	IM663	3	2 3/8	1 31/32	3 1/8	1 9/32		•	
2 1/8	IM683	3 1/8	2 3/8	2 3/32	3 1/4	1 9/32		•	
2 3/16	IM703	3 1/4	2 3/8	2 5/32	3 11/32	1 7/16		•	
2 1/4	IM723	3 1/4	2 3/8	2 5/32	3 11/32	1 7/16		•	
2 5/16	IM743	3 3/8	2 3/8	2 5/32	3 1/2	1 1/2		•	
2 3/8	IM763	3 1/2	2 3/8	2 5/32	3 1/2	1 1/2		•	
2 7/16	IM783	3 1/2	2 3/8	2 5/32	3 1/2	1 1/2		•	
2 1/2	IM803	3 1/2	2 3/8	2 1/8	3 5/8	1 5/8		•	
2 9/16	IM823	3 5/8	2 3/8	2 1/8	3 5/8	1 5/8		•	
2 5/8	IM843	3 3/4	2 3/8	2 5/16	3 3/4	1 5/8		•	
2 11/16	IM863	3 3/4	2 3/8	2 1/2	4	1 13/16		•	

	6	A	B	C	D	E	El juego contiene: 521IM	516IM	522IM
2 3/4	IM883	3 3/4	2 3/8	2 7/16	4	1 13/16		•	
2 13/16	IM903	4	2 3/8	2 7/16	4	1 13/16		•	
2 7/8	IM923	4	2 3/8	2 7/16	4	1 13/16		•	
2 15/16	IM943	4 1/8	2 3/8	2 5/8	4 1/4	2		•	
3	IM963	4 1/4	2 3/8	2 5/8	4 1/4	2 1/16		•	
3 1/8	IM1003	4 1/4	2 3/8	2 9/16	4 1/4	2 1/16		•	
3 1/4	IM1043	4 1/2	2 3/8	2 9/16	4 1/4	2 1/16		•	
3 3/8	IM1083	4 5/8	2 3/8	2 3/4	4 1/2	2 1/4		•	
3 1/2	IM1123	4 3/4	2 3/8	3	4 3/4	2 1/4		•	
3 5/8	IM1163	5	2 3/8	2 15/16	4 3/4	2 5/16			•
3 11/16	IM1183	5 5/16	2 3/8	3 3/16	5	2 7/16			•
3 3/4	IM1203	5 1/8	2 3/8	2 7/8	4 3/4	2 3/8			•
3 13/16	IM1223	5 3/8	2 3/8	3 1/8	5	2 1/2			•
3 7/8	IM1243	5 1/4	2 3/8	3 1/8	5	2 9/16			•
3 15/16	IM1263	5 3/8	2 3/8	3 3/8	5 1/4	2 9/16			•
4	IM1283	5 1/2	2 3/8	3 1/16	5	2 9/16			•
4 1/16	IM1303	5 1/2	2 3/8	3 1/16	5	2 9/16			•
4 1/8	IM1323	5 9/16	2 3/8	3 1/16	5	2 9/16			•
4 3/16	IM1343	6	2 3/8	3	5	2 9/16			•
4 1/4	IM1363	5 3/4	2 3/8	3 1/4	5 1/4	2 5/8			•
4 5/16	IM1383	5 25/32	2 3/8	3 7/16	5 1/2	2 5/8			•
4 3/8	IM1403	5 13/16	2 3/8	3 3/16	5 1/4	2 5/8			•
4 7/16	IM1423	6	2 3/8	3 3/16	5 1/4	2 11/16			•
4 1/2	IM1443	6	2 3/8	3 3/16	5 1/4	2 5/8			•
4 9/16	IM1463	6 1/2	2 3/8	3 7/16	5 1/2	2 3/4			•
4 5/8	IM1483	6 7/16	2 3/8	3 7/8	6	3 1/16			•
4 3/4	IM1523	6 5/8	2 3/8	3 5/8	5 3/4	2 7/8			•
4 7/8	IM1563	7	2 3/8	3 9/16	5 3/4	3			•
5	IM1603	7	2 3/8	3 1/2	5 3/4	3			•
5 3/8	IM1723	7 1/2	2 3/8	4 7/16	6 3/4	3 9/16			•
5 3/4	IM1843	8 1/4	2 3/8	4 5/16	6 3/4	3 9/16			•

⚠ ADVERTENCIA • Lea las precauciones de seguridad en las páginas W1 a W4

DADOS DE IMPACTO FLANK DRIVE®

SIM563

Profundo, pulgadas

11	6	A	B	C	D	E	El juego contiene: 519SIM	520SIM	517SIM
7/8	SIM283	1 19/32	2 1/8	1 13/16	3	5/8	•		
15/16	SIM303	1 19/32	2 1/8	1 13/16	3	11/16	•		
1	SIM323	1 19/32	2 1/8	1 13/16	3	3/4	•		
1 1/16	SIM343	1 3/4	2 1/8	1 13/16	3	3/4	•		
1 1/8	SIM363	1 13/16	2 1/8	1 13/16	3	3/4	•		
1 3/16	SIM383	1 13/16	2 1/8	1 13/16	3	3/4	•		
1 1/4	SIM403	2 1/16	2 1/8	2 1/16	3 1/4	7/8	•		
1 5/16	SIM423*	2 1/16	2 1/8	2 1/16	3 1/4	7/8	•		
1 3/8	SIM443	2 1/16	2 1/8	2 1/16	3 1/4	7/8	•		
1 7/16	SIM463A	2 1/4	2 1/8	2 3/32	3 1/4	29/32	•		
1 1/2	SIM483B**	2 3/8	2 1/4	2 11/32	3 1/2	1	•		
1 9/16	SIM503A	2 3/8	2 1/4	2 11/32	3 1/2	1	•		
1 5/8	SIM523B	2 3/8	2 1/4	2 1/2	3 5/8	1	•		
1 11/16	SIM543	2 1/2	2 3/8	2 7/16	3 5/8	1 1/8	•		
1 3/4	SIM563	2 3/4	2 3/8	2 11/16	3 7/8	1 1/8	•		
1 13/16	SIM583	2 3/4	2 3/8	2 11/16	3 7/8	1 3/16	•		
1 7/8	SIM603	2 3/4	2 3/8	2 11/16	3 7/8	1 3/16	•		
1 15/16	SIM623	3	2 3/8	2 15/16	4 1/8	1 1/4	•		
2	SIM643	3	2 3/8	2 15/16	4 1/8	1 5/16	•		
2 1/16	SIM663	3	2 1/4	2 15/16	4 1/4	1 5/16		•	
2 1/8	SIM683	3 1/8	2 1/4	2 7/8	4 1/4	1 5/16		•	
2 3/16	SIM703	3 1/4	2 1/4	3 1/8	4 1/2	1 1/2		•	
2 1/4	SIM723	3 1/4	2 3/8	3 1/8	4 1/2	1 1/2		•	
2 5/16	SIM743	3 3/8	2 3/8	3 1/16	4 1/2	1 1/2		•	
2 3/8	SIM763	3 1/2	2 3/8	3 1/16	4 1/2	1 1/2		•	
2 7/16	SIM783	3 1/2	2 3/8	3 1/16	4 1/2	1 1/2		•	
2 1/2	SIM803	3 1/2	2 3/8	3 1/4	4 3/4	1 5/8		•	
2 9/16	SIM823	3 5/8	2 3/8	3 1/4	4 3/4	1 5/8		•	
2 5/8	SIM843	3 3/4	2 3/8	3 1/4	4 3/4	1 5/8		•	
2 11/16	SIM863	3 3/4	2 3/8	3 1/2	5	1 13/16		•	
2 3/4	SIM883	3 3/4	2 3/8	3 7/16	5	1 13/16		•	
2 13/16	SIM903	4	2 3/8	3 7/16	5	1 3/4		•	
2 7/8	SIM923	4	2 3/8	3 7/16	5	1 3/4		•	
2 15/16	SIM943	4 1/8	2 3/8	3 3/8	5	1 3/4		•	
3	SIM963	4 1/4	2 3/8	3 5/8	5 1/4	1 3/4		•	
3 1/8	SIM1003	4 1/4	2 3/8	3 9/16	5 1/4	1 7/8		•	
3 1/4	SIM1043	4 1/2	2 3/8	3 9/16	5 1/4	1 7/8		•	
3 3/8	SIM1083	4 1/2	2 3/8	4	5 3/4	2 1/4		•	
3 1/2	SIM1123	4 3/4	2 3/8	4	5 3/4	2 1/4		•	
3 5/8	SIM1163	5	2 3/8	3 15/16	5 3/4	2 1/4			•
3 11/16	SIM1183	5 5/16	2 3/8	3 15/16	5 3/4	2 7/16			•
3 3/4	SIM1203	5 1/8	2 3/8	3 7/8	5 3/4	2 1/4			•
3 13/16	SIM1223	5 3/8	2 3/8	4 1/8	6	2 1/2			•
3 7/8	SIM1243	5 1/4	2 3/8	4 3/8	6 1/4	2 9/16			•
3 15/16	SIM1263	5 1/2	2 3/8	4 3/8	6 1/4	2 3/8			•
4	SIM1283	5 1/2	2 3/8	4 5/16	6 1/4	2 9/16			•
4 1/16	SIM1303	5 1/2	2 3/8	4 5/16	6 1/4	2 1/2			•
4 1/8	SIM1323	5 9/16	2 3/8	4 5/16	6 1/4	2 9/16			•
4 3/16	SIM1343	6	2 3/8	4 1/4	6 1/4	2 1/2			•
4 7/16	SIM1423	6	2 3/8	4 3/16	6 1/4	2 11/16			•
4 1/2	SIM1443	6	2 3/8	4 7/16	6 1/2	2 3/4			•
4 9/16	SIM1463	6 1/2	2 3/8	4 7/16	6 1/2	2 3/4			•
4 5/8	SIM1483	6 5/8	2 3/8	4 3/8	6 1/2	2 13/16			•
4 3/4	SIM1523	6 5/8	2 3/8	4 5/8	6 3/4	2 7/8			•
4 7/8	SIM1563	7	2 3/8	4 9/16	6 3/4	3			•
5	SIM1603	7	2 3/8	4 1/2	6 3/4	3			•
5 3/8	SIM1723	7 1/2	2 3/8	5 7/16	7 3/4	3 9/16			
5 3/4	SIM1843	8 1/4	2 3/8	5 5/16	7 3/4	3 9/16			

*Las aplicaciones incluyen el uso en tuercas de ruedas de servicio pesado.
**Las aplicaciones incluyen el uso en tuercas de ruedas en sistemas de ruedas con guía de pernos/estilo Budd.

DADOS DE IMPACTO FLANK DRIVE®

Profundo, mm

mm	6	A	B	C	D	E
30	**SIMM303**	46.0	53.7	46.0	76.2	19.1
32	**SIMM323**	52.3	53.7	76.2	82.6	22.4
33	**SIMM333***	52.3	53.7	53.3	82.5	22.4
38	**SIMM383**	60.3	57.2	59.7	88.9	25.4

*Las aplicaciones incluyen el uso en tuercas de ruedas en sistemas de rueda con guía de cubos.

SIMM323

Poco profundo de pared delgada, mm

mm	6	A	B	C	D	E
70	**IMM705TW**	91.2	82.6	67.5	114.3	44.3

IMM705TW

DADOS DE IMPACTO PARA APLICACIONES ESPECIALES

Cuadro simple poco profundo, pulgadas

11	4	A	B	C	D	E
3/4	**IM724**	1 15/16	2 1/8	31/32	2 1/8	21/32
13/16	**IM726**	1 15/16	2 1/8	31/32	2 1/8	21/32
7/8	**IM728**	2 1/16	2 1/8	31/32	2 1/8	21/32
15/16	**IM730**	2 1/16	2 1/8	15/16	2 1/8	5/8
1	**IM732**	2 1/8	2 1/8	1 3/32	2 1/4	25/32
1 1/8	**IM736**	2 1/4	2 1/4	1 3/32	2 1/4	25/32

IM724

Doble cuadro poco profundo, pulgadas

11	8	A	B	C	D	E
1 1/4	**IM740**	2 3/8	2 3/8	1 1/8	2 3/8	13/16

IM740

EMPUÑADURAS CON CUADRO DE 1 1/2"

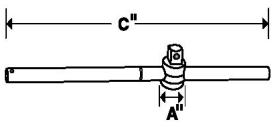

L55

Empuñadura en "T" deslizable

Pieza N.º	C	Solo cabeza deslizable Pieza N.º	A	Empuñadura Pieza. N.º
L55	36	**L55-2**	2 7/8	**L55-1**

⚠ ADVERTENCIA

- No use "barras" en las empuñaduras
- Lea las precauciones de seguridad en las páginas W1 a W4

ACCESORIOS DE IMPACTO CON CUADRO ESTRIADO #5 DE 1 1/2"

IM105

Extensiones con agujero pasador

Pieza N.º	A	B
IM105	2	10
IM155	2	15
IM205	2	20

IP85

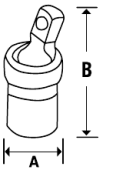

Junta universal giratoria

Pieza N.º	Tipo de retención	A	B
IP85	Agujero pasador	3 5/8	6 1/16

IM53

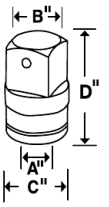

Adaptadores con cuadro cuadrado

Pieza N.º	A	B	C	D
IM35	1	1 1/2	2 1/4	3 1/2
IM53	1 1/2	1	3 1/4	4 1/4
IM59	1 1/2	2 1/2	3 1/4	4 3/4
IM95	2 1/2	1 1/2	5	6 3/8

IMSA3

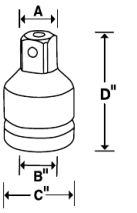

Adaptador de estriado a cuadrado

Pieza N.º	A	B	C	D
IMSA3	Cuadrado de 1"	N.º 5, 14 dientes	2 3/8	3 3/8

IM243R

IM243P

IMR3

Tabla de referencia de anillos y pasadores para dados y accesorios de impacto con cuadro estriado #5 de 1" y 1 1/2"

Se necesitan los siguientes elementos para el uso de la herramienta:

Pieza N.º	Descripción	Usar con
IM243R	Anillo de traba de goma (usar con IM243P)	Dados/accesorios con cuadro de 1" hasta 1 3/8" (35 mm) más adaptador IM124
IM243P	Pasador de traba de acero, usar con IM243R	Dados/accesorios con cuadro de 1" hasta 1 3/8" (35 mm)
IMR3	Retenedor de dado	Todos los dados/accesorios con cuadro de 1", Todos los dados/accesorios con cuadro estriado #5
IM483R	Pasador de traba de goma (usar con IM483P)	Todos los dados/accesorios con cuadro estriado más dados de cuadro de 1" desde 1 7/16" (35 mm)
IM483P	Pasador de traba de acero (usar con IM483R)	Todos los dados/accesorios con cuadro estriado más dados de cuadro de 1" desde 1 7/16" (35 mm)
IM445R	Anillo de traba de goma sintética para dados IM105, IM205, IM59, IP85, y "serie IGE"	Todos los dados/accesorios con cuadro de 1 1/2"

DADOS DE IMPACTO FLANK DRIVE®

IMM365

Poco profundo, mm

mm	6	A	B	C	D	E
36	IMM365	73.0	82.6	34.5	76.2	25.4
38	IMM385	73.0	82.6	34.5	76.2	25.4
41	IMM415	73.0	82.6	34.5	76.2	27.7
46	IMM465	79.4	82.6	40.9	82.6	29.7
50	IMM505	79.4	82.6	47.2	88.9	31.8
55	IMM555	88.9	82.6	47.2	88.9	35.6
60	IMM605	94.5	82.6	58.2	101.6	38.6
65	IMM655	99.2	82.6	56.6	101.6	41.4
70	IMM705	105.6	82.6	61.7	108.0	45.7
75	IMM755	111.1	82.6	66.5	114.3	47.2
80	IMM805	116.6	82.6	77.2	127	50.7

Poco profundo, pulgadas

							El juego contiene: 619IME	616IM	618IM	609IM
11	6	A	B	C	D	E				
1 3/8	IM445	2 7/8	3 1/4	1 3/8	3	1	•			
1 7/16	IM465	2 7/8	3 1/4	1 3/8	3	1	•			
1 1/2	IM485	3	3 1/4	1 3/8	3	1	•			
1 9/16	IM505	3	3 1/4	1 3/8	3	1	•			
1 5/8	IM525	2 7/8	3 1/4	1 3/8	3	1 1/16	•			
1 11/16	IM545	3	3 1/4	1 3/8	3	1 1/16	•			
1 3/4	IM565	3 1/8	3 1/4	1 5/8	3 1/4	1 1/8	•			
1 13/16	IM585	3 1/8	3 1/4	1 5/8	3 1/4	1 3/16	•			
1 7/8	IM605	3 1/8	3 1/4	1 7/8	3 1/2	1 3/16	•			
1 15/16	IM625A	3 1/8	3 1/4	1 7/8	3 1/2	1 1/4	•			
2	IM645	3 1/2	3 1/4	1 7/8	3 1/2	1 1/4	•			
2 1/16	IM665	3 1/2	3 1/4	1 7/8	3 1/2	1 7/16	•			
2 1/8	IM685	3 1/2	3 1/4	1 7/8	3 1/2	1 7/16	•			
2 3/16	IM705	3 1/2	3 1/4	1 7/8	3 1/2	1 1/2	•			
2 1/4	IM725A	3 3/4	3 1/4	2 1/8	3 3/4	1 7/16	•			
2 5/16	IM745	3 3/4	3 1/4	2	3 3/4	1 1/2	•			
2 3/8	IM765	3 7/8	3 1/4	2 1/4	4	1 1/2	•			
2 7/16	IM785	3 7/8	3 1/4	2 1/4	4	1 9/16	•			
2 1/2	IM805	3 7/8	3 1/4	2 1/4	4	1 5/8	•			
2 9/16	IM825	3 7/8	3 1/4	2 1/4	4	1 5/8		•		
2 5/8	IM845	4 1/16	3 1/4	2 1/2	4 1/4	1 11/16		•		
2 11/16	IM865	4 1/8	3 1/4	2 1/2	4 1/4	1 11/16		•		
2 3/4	IM885	4 1/4	3 1/4	2 3/8	4 1/4	1 13/16		•		
2 13/16	IM905	4 3/8	3 1/4	2 3/8	4 1/4	1 13/16		•		
2 7/8	IM925	4 3/8	3 1/4	2 3/8	4 1/4	1 13/16		•		
2 15/16	IM945	4 3/8	3 1/4	2 5/8	4 1/2	1 15/16		•		
3	IM965	4 7/16	3 1/4	2 5/8	4 1/2	1 15/16		•		
3 1/16	IM985	4 11/16	3 1/4	2 5/8	4 1/2	1 15/16		•		
3 1/8	IM1005	4 3/4	3 1/4	2 7/8	4 3/4	2		•		
3 3/16	IM1025	4 3/4	3 1/4	2 1/2	4 1/2	2		•		
3 1/4	IM1045	4 3/4	3 1/4	2 3/4	4 3/4	2 1/8		•		
3 5/16	IM1065	5	3 1/4	2 3/4	4 3/4	2 1/8		•		
3 3/8	IM1085	5	3 1/4	2 3/4	4 3/4	2 1/4		•		
3 7/16	IM1105	5	3 1/4	3	5	2 1/4		•		
3 1/2	IM1125	5 1/8	3 1/4	3	5	2 1/4		•		
3 9/16	IM1145	5 1/8	3 1/4	2 7/8	5	2 1/4			•	
3 5/8	IM1165	5 1/8	3 1/4	2 7/8	5	2 5/16			•	
3 11/16	IM1185	5 1/4	3 1/4	3 1/8	5 1/4	2 3/8			•	
3 3/4	IM1205	5 3/8	3 1/4	3 1/8	5 1/4	2 1/2			•	
3 13/16	IM1225	5 3/8	3 1/4	3 1/8	5 1/4	2 1/2			•	
3 7/8	IM1245	5 1/2	3 1/4	3 1/8	5 1/4	2 9/16			•	
3 15/16	IM1265	5 1/2	3 1/4	3 1/8	5 1/4	2 9/16			•	
4	IM1285	5 5/8	3 1/4	3 1/4	5 1/2	2 5/8			•	
4 1/16	IM1305	5 3/4	3 1/4	3 1/4	5 1/2	2 11/16			•	
4 1/8	IM1325	5 13/16	3 1/4	3 1/4	5 1/2	2 3/4			•	
4 1/4	IM1365	6	3 1/4	3 1/2	5 3/4	2 3/4			•	
4 5/16	IM1385	6 1/4	3 1/4	3 1/2	5 3/4	2 7/8			•	
4 3/8	IM1405	6 1/4	3 1/4	3 3/8	5 3/4	2 15/16			•	
4 7/16	IM1425	6 1/4	3 1/4	3 3/8	5 3/4	3			•	
4 1/2	IM1445	6 1/4	3 1/4	3 5/8	6	3 1/8			•	
4 5/8	IM1485	6 1/2	3 1/4	3 7/8	6 1/4	3 1/8			•	
4 3/4	IM1525	6 9/16	3 1/4	3 7/8	6 1/4	3 1/8			•	
4 7/8	IM1565	6 11/16	3 1/4	3 3/4	6 1/4	3 3/16			•	
5	IM1605	6 7/8	3 1/4	3 3/4	6 1/4	3 3/16				•
5 3/8	IM1725	7 5/16	3 1/4	3 5/8	6 1/4	3 7/16				•
5 3/4	IM1845	7 11/16	3 1/4	4 1/2	7 1/4	3 11/16				•
6 1/8	IM1965	8	3 1/4	4 3/8	7 1/4	3 15/16				•
6 1/2	IM2085	8 3/8	3 1/4	5	8	4 3/16				•
6 7/8	IM2205	8 13/16	3 1/4	4 7/8	8	4 3/8				•
7 1/4	IM2325	9 3/16	3 1/4	6 1/8	9 1/4	4 5/8				•
7 5/8	IM2445	9 1/2	3 1/4	6 1/4	9 1/2	4 7/8				•
8	IM2565	10	3 1/4	6 5/8	10	5 1/8				•

IM445

ADVERTENCIA • Lea las precauciones de seguridad en las páginas W1 a W4

DADOS DE IMPACTO FLANK DRIVE®

SIM485

Profundo, pulgadas

	6	A	B	C	D	E
1 3/16	SIM445	2 7/8	3 1/4	2 5/8	4 1/4	1
1 7/16	SIM465	2 7/8	3 1/4	2 5/8	4 1/4	1
1 1/2	SIM485	2 7/8	3 1/4	2 5/8	4 1/4	1
1 5/8	SIM525	2 7/8	3 1/4	2 5/8	4 1/4	1 1/8
1 11/16	SIM545	3	3 1/4	2 5/8	4 1/4	1 1/8
2	SIM645	3 3/8	3 1/4	3 1/8	4 3/4	1 1/4
2 1/16	SIM665	3 7/16	3 1/4	3 1/8	4 3/4	1 5/16
2 3/16	SIM705	3 1/2	3 1/4	3 3/8	5	1 3/8
2 1/4	SIM725	3 9/16	3 1/4	3 5/8	5 1/4	1 1/2
2 5/16	SIM745	3 5/8	3 1/4	3 1/2	5 1/4	1 9/16
2 3/8	SIM765	3 3/4	3 1/4	3 1/2	5 1/4	1 9/16
2 7/16	SIM785	3 3/4	3 1/4	3 1/2	5 1/4	1 9/16
2 1/2	SIM805	3 7/8	3 1/4	3 1/2	5 1/4	1 5/8
2 9/16	SIM825	3 7/8	3 1/4	3 3/4	5 1/2	1 5/8
2 5/8	SIM845	4	3 1/4	3 3/4	5 1/2	1 11/16
2 11/16	SIM865	4 1/8	3 1/4	3 3/4	5 1/2	1 3/4
2 3/4	SIM885	4 1/8	3 1/4	3 5/8	5 1/2	1 13/16
2 13/16	SIM905	4 1/4	3 1/4	3 7/8	5 3/4	1 13/16
2 7/8	SIM925	4 5/16	3 1/4	3 7/8	5 3/4	1 7/8
2 15/16	SIM945	4 3/8	3 1/4	3 7/8	5 3/4	1 15/16
3	SIM965	4 7/16	3 1/4	4 1/8	6	1 15/16
3 1/16	SIM985	4 9/16	3 1/4	4 1/8	6	2
3 1/8	SIM1005	4 5/8	3 1/4	4 1/8	6	2 1/16
3 3/16	SIM1025	4 11/16	3 1/4	4 1/4	6 1/4	2 1/8
3 1/4	SIM1045	4 3/4	3 1/4	4 1/4	6 1/4	2 1/8
3 5/16	SIM1065	4 7/8	3 1/4	4 1/4	6 1/4	2 3/16
3 3/8	SIM1085	4 15/16	3 1/4	4 1/4	6 1/4	2 1/4
3 7/16	SIM1105	5	3 1/4	4 1/2	6 1/2	2 1/4
3 1/2	SIM1125	5 1/16	3 1/4	4 1/2	6 1/2	2 5/16
3 9/16	SIM1145	5 1/8	3 1/4	4 3/8	6 1/2	2 3/8
3 5/8	SIM1165	5 1/4	3 1/4	4 5/8	6 3/4	2 7/16
3 11/16	SIM1185	5 5/16	3 1/4	4 5/8	6 3/4	2 7/16
3 3/4	SIM1205	5 3/8	3 1/4	4 5/8	6 3/4	2 1/2
3 13/16	SIM1225	5 7/16	3 1/4	4 7/8	7	2 1/2
3 7/8	SIM1245	5 1/2	3 1/4	4 7/8	7	2 9/16
3 15/16	SIM1265	5 5/8	3 1/4	5 1/8	7 1/4	2 9/16
4	SIM1285	5 5/8	3 1/4	5	7 1/4	2 5/8
4 1/16	SIM1305	5 3/4	3 1/4	5 1/4	7 1/2	2 11/16
4 1/8	SIM1325	5 13/16	3 1/4	5 1/4	7 1/2	2 3/4
4 1/4	SIM1365	6	3 1/4	5 1/2	7 3/4	2 13/16
4 5/16	SIM1385	6 1/4	3 1/4	5 1/2	7 3/4	3
4 3/8	SIM1405	6 1/4	3 1/4	5 3/8	7 3/4	3
4 1/2	SIM1445	6 1/4	3 1/4	5 5/8	8	3
4 5/8	SIM1485	6 3/8	3 1/4	5 5/8	8	3 1/16
4 3/4	SIM1525	6 1/2	3 1/4	5 5/8	8	3 1/16

Anillos y pasadores de traba para extensiones, adaptadores y dados de impacto de 1 1/2" y dados de impacto de 2 1/2"

IM243P

IM243R

Pieza N.º	Descripción	Usar con
IM243R	Anillo de traba de goma (usar con IM243P)	Dados/accesorios con cuadro de 1" hasta 1 3/8" (35 mm) más adaptador IM124
IM243P	Pasador de traba de acero (usar con IM243R)	Dados/accesorios con cuadro de 1" hasta 1 3/8" (35 mm)
IM445R	Anillo de traba de goma sintética para dados IM105, IM205, IM59, IP85, y "serie IGE"	Todos los dados/accesorios con cuadro de 1 1/2"
IM729P	Pasador de traba de acero	Todos los dados/accesorios con cuadro de 2 1/2"

DADOS DE IMPACTO FLANK DRIVE®

Poco profundo, pulgadas

					El juego contiene:	716IM	713IM	714IM	711IM
	6	A	B	C	D	6	6	6	6
2	IM649	3 7/16	5	2 31/32	5 1/2	•			
2 3/16	IM709	3 21/32	5	3 7/32	5 3/4	•			
2 1/4	IM729	3 23/32	5	3 7/32	5 3/4	•			
2 3/8	IM769	3 7/8	5	3 15/32	6	•			
2 1/2	IM809	4	5	3 15/32	6	•			
2 9/16	IM829	4 3/32	5	3 15/32	6	•			
2 5/8	IM849	4 5/32	5	3 15/32	6	•			
2 3/4	IM889	4 5/16	5	3 23/32	6 1/4	•			
2 7/8	IM929	4 7/16	5	3 23/32	6 1/4	•			
2 15/16	IM949	4 17/32	5	3 23/32	6 1/4	•			
3	IM969	4 19/32	5	3 23/32	6 1/4	•			
3 1/8	IM1009	4 3/4	5	3 31/32	6 1/2	•			
3 1/4	IM1049	5	5	3 31/32	6 1/2	•			
3 3/8	IM1089	5	5	3 31/32	6 1/2	•			
3 7/16	IM1109	5	5	4 7/32	6 3/4	•			
3 1/2	IM1129	5 3/16	5	4 7/32	6 3/4	•			
3 5/8	IM1169	5 5/16	5	4 7/32	6 3/4		•		
3 3/4	IM1209	5 15/32	5	4 15/32	7		•		
3 7/8	IM1249	5 5/8	5	4 15/32	7		•		
4	IM1289	5 3/4	5	4 15/32	7		•		
4 1/16	IM1309	5 27/32	5	4 15/32	7		•		
4 1/8	IM1329	5 29/32	5	4 23/32	7 1/4		•		
4 1/4	IM1369	6 1/16	5	4 23/32	7 1/4		•		
4 3/8	IM1409	6 7/32	5	4 23/32	7 1/4		•		
4 1/2	IM1449	6 11/32	5	4 31/32	7 1/2		•		
4 5/8	IM1489	6 1/2	5	4 31/32	7 1/2		•		
4 3/4	IM1529	6 21/32	5	4 31/32	7 1/2		•		
4 7/8	IM1569	6 25/32	5	5 7/32	7 3/4		•		
5	IM1609	6 15/16	5	5 7/32	7 3/4		•		
5 1/8	IM1649	7 3/32	5	5 7/32	7 3/4			•	
5 1/4	IM1689	7 7/32	5	5 15/32	8			•	
5 3/8	IM1729	7 3/8	5	5 15/32	8			•	
5 7/16	IM1749	7 7/16	5	5 3/8	8			•	
5 1/2	IM1769	7 17/32	5	5 5/8	8 1/4			•	
5 5/8	IM1809	7 21/32	5	5 19/32	8 1/4			•	
5 3/4	IM1849	7 13/16	5	5 19/32	8 1/4			•	
5 7/8	IM1889	7 31/32	5	5 13/16	8 1/2			•	
6	IM1929	8 3/32	5	5 3/4	8 1/2			•	
6 1/8	IM1969	8 1/4	5	5 3/4	8 1/2			•	
6 1/4	IM20099	8 13/32	5	5 31/32	8 3/4			•	
6 3/8	IM2049	8 17/32	5	5 15/16	8 3/4			•	
6 1/2	IM2089	8 11/16	5	5 15/16	8 3/4			•	
6 5/8	IM2129	8 27/32	5	6 5/32	9			•	
6 3/4	IM2169	8 31/32	5	6 1/8	9				•
6 7/8	IM2209	9 1/8	5	6 1/8	9				•
7	IM2249	9 9/32	5	6 5/16	9 1/4				•
7 1/8	IM2289	9 13/32	5	6 5/16	9 1/4				•
7 1/4	IM2329	9 9/16	5	6 17/32	9 1/2				•
7 3/8	IM2369	9 23/32	5	6 1/2	9 1/2				•
7 1/2	IM2409	9 7/8	5	6 1/2	9 1/2				•
7 5/8	IM2449	10	5	6 23/32	9 3/4				•
7 3/4	IM2489	10 5/32	5	6 11/16	9 3/4				•
7 7/8	IM2529	10 5/16	5	6 11/16	9 3/4				•
8	IM2569	10 7/16	5	6 7/8	10				•

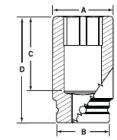

IM2209

⚠ ADVERTENCIA • Lea las precauciones de seguridad en las páginas W1 a W4

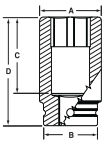

IMM1159

Poco profundo, mm

mm	6	A	B	C	D	El juego contiene: 713IMM	710IMM	709IMM
60	IMM609	97.6	127	88.1	152.4	•		
65	IMM659	104.0	127	88.1	152.4	•		
67	IMM679	105.6	127	88.1	152.4	•		
70	IMM709	109.5	127	94.5	158.8	•		
71	IMM719	110.3	127	94.5	158.8	•		
75	IMM759	115.1	127	94.5	158.8	•		
80	IMM809	121.4	127	100.8	165.1	•		
85	IMM859	127.0	127	100.8	165.1	•		
86	IMM869	127.0	127	100.8	165.1	•		
90	IMM909	132.6	127	107.2	171.5	•		
95	IMM959	138.9	127	107.2	171.5	•		
98	IMM989	142.1	127	113.5	177.8	•		
100	IMM1009	144.5	127	113.5	177.8	•		
105	IMM1059	150.8	127	119.9	184.2		•	
110	IMM1109	156.4	127	119.9	184.2		•	
115	IMM1159	161.9	127	126.2	190.5		•	
120	IMM1209	168.3	127	126.2	190.5		•	
125	IMM1259	173.8	127	132.6	196.9		•	
130	IMM1309	179.4	127	132.6	196.9		•	
135	IMM1359	185.7	127	138.9	203.2		•	
140	IMM1409	191.3	127	142.9	209.6		•	
145	IMM1459	196.9	127	142.1	209.6		•	
150	IMM1509	203.2	127	147.6	215.9		•	
155	IMM1559	208.8	127	146.1	215.9			•
160	IMM1609	215.1	127	151.6	222.3			•
165	IMM1659	215.1	127	150.8	222.3			•
170	IMM1709	226.2	127	156.4	228.6			•
175	IMM1759	232.6	127	161.9	235.0			•
180	IMM1809	238.1	127	160.3	235.0			•
185	IMM1859	243.7	127	165.9	241.3			•
190	IMM1909	250.0	127	165.1	241.3			•
200	IMM2009	261.9	127	169.9	247.7			•

IM243R

IM243P

IMR3

Tabla de referencia de anillos y pasadores para dados de impacto y accesorios

Se necesitan los siguientes elementos para el uso de la herramienta:

Pieza N.º	Descripción	Utilizadas con
IM182R	Anillo de traba de goma	Todos los dados/accesorios con cuadro de 3/4"
IMR2	Retenedor de dado	Todos los dados/accesorios con cuadro de 3/4"
IM243R	Anillo de traba de goma (usar con IM243P)	Dados/accesorios con cuadro de 1" hasta 1 3/8" (35 mm) más adaptador IM124
IM243P	Pasador de traba de acero, usar con IM243R	Dados/accesorios con cuadro de 1" hasta 1 3/8" y hasta 35 mm
IMR3	Retenedor de dado	Todos los dados/accesorios con cuadro de 1", Todos los dados/accesorios con cuadro estriado #5
IM483R	Pasador de traba de goma (usar con IM483P)	Todos los dados/accesorios con cuadro estriado más dados de cuadro de 1" desde 1 7/16" (35 mm)
IM483P	Pasador de traba de acero (usar con IM483R)	Todos los dados/accesorios con cuadro estriado más dados de cuadro de 1" desde 1 7/16" (35 mm)
IM445R	Anillo de traba de goma sintética para dados IM105, IM205, IM59, IP85, y "serie IGE"	Todos los dados/accesorios con cuadro de 1 1/2"
IM729P	Pasador de traba de acero	Todos los dados/accesorios con cuadro de 2 1/2"

COMBINACIÓN ESTRIADAS

Las herramientas de llaves estriadas Snap-on® han sido desarrolladas para tuercas y pernos estriados de alta resistencia a la tracción ampliamente utilizados en aeronaves militares y comerciales.
Los precisos dientes radiales y estriados enganchan los dientes del sujetador sobre un área más amplia para minimizar la carga y permitir la aplicación de torque alto para reducir el riesgo de daños en el sujetador o la herramienta. Las herramientas cromadas cumplen con las especificaciones militares MS-33787 y MIL-W-8982. La configuración única de las llaves estriadas también puede usarse en sujetadores comunes de 6 y 12 puntas, con una ventaja similar a la que ofrece el sistema de llaves con Flank Drive® de *Snap-on*.

Empuñadura corta, pulgadas

		Pieza N.º	A	B	C	D	E
#8	1/4	**OES8B**	13/32	17/32	1/8	5/32	4 1/2
#10	5/16	**OES10B**	15/32	21/32	11/64	15/64	4 55/64
#12	3/8	**OES12B**	17/32	25/32	13/64	17/64	5 7/32
#14	7/16	**OES14B**	5/8	29/32	15/64	5/16	5 27/64
#16	1/2	**OES16B**	23/32	1 1/16	1/4	5/16	5 47/64
#18	9/16	**OES18B**	13/16	1 3/16	17/64	21/64	6 1/32
#20	5/8	**OES20B**	7/8	1 5/16	9/32	11/32	6 5/16
#22	11/16	**OES22B**	31/32	1 7/16	19/64	23/64	6 39/64
#24	3/4	**OES24B**	1 1/16	1 9/16	5/16	3/8	6 29/32

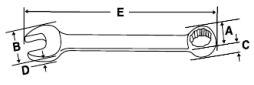

OES18B

COMBINACIÓN Blue-Point®

BLPCWSM712

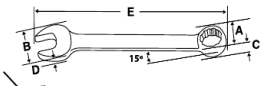

BLPCWS711

Empuñadura estándar, mm

El juego contiene: BLPCWSM712

mm	Pieza N.º	Largo, mm	12
8	**BLPCWM8**	148	•
9	**BLPCWM9**	160	•
10	**BLPCWM10**	167	•
11	**BLPCWM11**	186	•
12	**BLPCWM12**	196	•
13	**BLPCWM13**	205	•
14	**BLPCWM14**	223	•
15	**BLPCWM15**	233	•
16	**BLPCWM16**	243	•
17	**BLPCWM17**	262	•
18	**BLPCWM18**	272	•
19	**BLPCWM19**	281	•

El juego incluye una bandeja de almacenamiento

Empuñadura estándar, pulgadas

El juego contiene: BLPCWS711

	Pieza N.º	Largo, pulgadas	12
1/4	**BLPCW14**	5 1/32	
5/16	**BLPCW516**	5 7/32	
3/8	**BLPCW38**	6 9/16	•
7/16	**BLPCW716**	7 11/32	•
1/2	**BLPCW12**	8 1/16	•
9/16	**BLPCW916**	8 25/32	•
5/8	**BLPCW58**	9 9/16	•
11/16	**BLPCW1116**	10 5/16	•
3/4	**BLPCW34**	11 1/16	•
13/16	**BLPCW1316**	11 27/32	•
7/8	**BLPCW78**	12 9/16	•
15/16	**BLPCW1516**	13 11/32	•
1	**BLPCW1**	14 3/32	•

El juego incluye una bandeja de almacenamiento

DE OJO, COMPENSADA CON *FLANK DRIVE*

Empuñadura estándar, compensada a 10°, mm

El juego contiene: XBM605A

mm	6	12	A	C	E	12
8-10	–	**XBM810A**	12.3–15	6.7–7.7	185	
10-11	–	**XBM1011A**	15-16.4	7.7-8.3	202	•
10-12	–	**XBM1012A**	15-17.7	7.7-8.8	208	
11-13	–	**XBM1113A**	16.4-19.1	8.3-9.3	219	
12-14	**XBM1214SA**	**XBM1214A**	17.7-20.4	8.8-9.7	230	•
13-15	**XBM1315SA**	**XBM1315A**	19.1-21.8	9.3-10.2	241	•
14-17	–	**XBM1417A**	20.4-24.5	9.8-11.4	248	
16-18	–	**XBM1618A**	23.1-25.9	10.9-11.9	275	•
17-19	–	**XBM1719A**	24.5-27.2	11.4-12.3	286	•
18-21	–	**XBM1821A**	25.9-29.9	11.9-13.3	303	
22-24	–	**XBM2224A**	31.3-34	13.7-14.7	342	
27-30	–	**XBM2730A**	38.1-42.2	16-17.3	404	

ASME® B107.100

El juego incluye una bandeja de almacenamiento

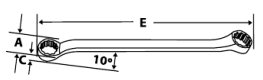

XBM605A

⚠ ADVERTENCIA

• No use "barras" en las empuñaduras
• Lea las precauciones de seguridad en las páginas W1 a W4

OZAT

OZAT

www.newmantools.com tel 1-800-465-1384 fax 1-800-605-2442

½" SQUARE DRIVE

SIX POINT IMPACT SOCKETS

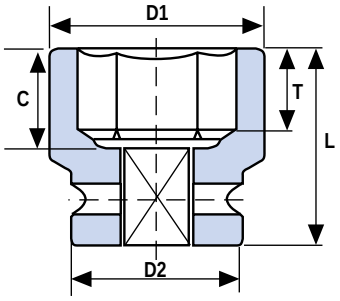

STANDARD FRACTIONAL SIZES

SIZE	PART#	D1	D2	L	T	C
3/8	Z-0806	0.630	0.984	1.482	0.157	0.595
7/16	Z-0807	0.748	0.984	1.482	0.236	0.595
1/2	Z-0808	0.787	0.984	1.482	0.236	0.674
9/16	Z-0809	0.866	0.984	1.482	0.276	0.674
5/8	Z-0810	0.984	1.181	1.482	0.315	0.753
11/16	Z-0811	1.102	1.181	1.482	0.354	0.753
3/4	Z-0812	1.102	1.181	1.482	0.335	0.753
13/16	Z-0813	1.181	1.181	1.482	0.433	0.832
7/8	Z-0814	1.181	1.181	1.482	0.512	0.910
15/16	Z-0815	1.378	1.181	1.482	0.512	0.910
1	Z-0816	1.496	1.181	1.482	0.512	0.950
1-1/16	Z-0817	1.496	1.181	1.950	0.512	0.950
1-1/8	Z-0818	1.614	1.181	1.560	0.643	1.107
1-3/16	Z-0819	1.614	1.181	1.950	0.643	1.107
1-1/4	Z-0820	1.732	1.378	1.560	0.669	1.107
1-5/16	Z-0821	1.732	1.378	1.677	0.748	1.186
1-3/8	Z-0822	1.929	1.378	1.560	0.748	1.265
1-7/16	Z-0823	1.929	1.732	1.950	0.748	1.265
1-1/2	Z-0824	2.047	1.732	1.950	0.846	1.344

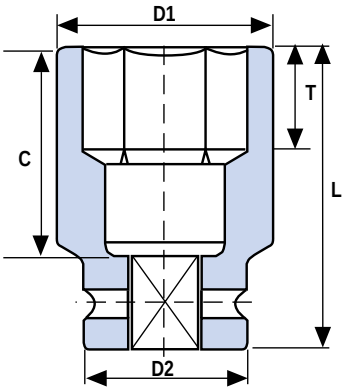

DEEP FRACTIONAL SIZES

SIZE	PART#	D1	D2	L	T	C
3/8	Z-0806L	0.6307	0.984	3.042	0.157	2.721
7/16	Z-0807L	0.748	0.984	3.042	0.236	2.721
1/2	Z-0808L	0.787	0.984	3.042	0.236	2.721
9/16	Z-0809L	0.866	0.984	3.042	0.276	2.721
5/8	Z-0810L	0.984	1.181	3.042	0.315	2.721
11/16	Z-0811L	1.102	1.181	3.042	0.354	2.721
3/4	Z-0812L	1.102	1.181	3.042	0.335	2.721
13/16	Z-0813L	1.181	1.181	3.042	0.433	2.721
7/8	Z-0814L	1.181	1.181	3.042	0.512	2.721
15/16	Z-0815L	1.378	1.181	3.042	0.512	2.721
1	Z-0816L	1.496	1.181	3.042	0.512	2.721
1-1/16	Z-0817L	1.496	1.181	3.042	0.512	2.721
1-1/8	Z-0818L	1.614	1.181	3.042	0.643	2.721
1 -3/16	Z-0819L	1.614	1.181	3.042	0.643	2.721
1 -1/4	Z-0820L	1.732	1.378	3.042	0.669	2.721
1 -5/16	Z-0821L	1.732	1.378	3.042	0.748	2.721
1 -3/8	Z-0822L	1.929	1.378	3.042	0.748	2.721
1 -7/16	Z-0823L	1.929	1.732	3.042	0.748	2.721
1 -1/2	Z-0824L	2.047	1.732	3.042	0.846	2.721

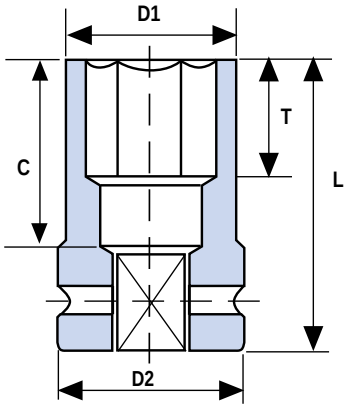

STANDARD FRACTIONAL THINWALL

SIZE	PART#	D1	D2	L	T	C
9/16	Z-0809T	0.866	0.984	1.482	0.551	0.700
5/8	Z-0810T	0.984	0.984	1.482	0.551	0.750
11/16	Z-0811T	0.984	0.984	1.482	0.551	0.750
3/4	Z-0812T	1.102	1.181	1.482	0.551	0.750
13/16	Z-0813T	1.102	1.181	1.482	0.551	0.780
7/8	Z-0814T	1.181	1.181	1.482	0.551	0.780
15/16	Z-0815T	1.299	1.181	1.482	0.551	0.810

Quality OZAT 1/2" Drive impact sockets are preferred in many industrial applications where long wearing sockets are required for severe applications. From assembly lines to plant maintenance to busy tire shops, OZAT sockets reduce cost and downtime.

½" SQUARE DRIVE

SIX POINT IMPACT SOCKETS

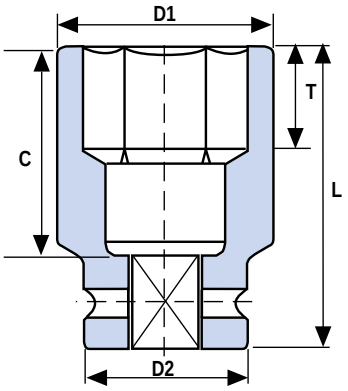

DEEP FRACTIONAL THINWALL

SIZE	PART#	D1	D2	L	T	C
9/16	Z-0809LT	0.866	0.984	3.042	0.551	2.721
5/8	Z-0810LT	0.984	0.984	3.042	0.551	2.721
11/16	Z-0811LT	0.984	0.984	3.042	0.551	2.721
3/4	Z-0812LT	1.102	1.181	3.042	0.551	2.721
13/16	Z-0813LT	1.102	1.181	3.042	0.551	2.721
7/8	Z-0814LT	1.181	1.181	3.042	0.551	2.721
15/16	Z-0815LT	1.299	1.181	3.042	0.551	2.721

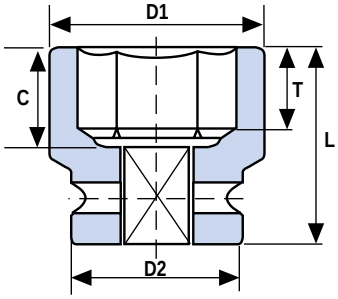

STANDARD METRIC SIZES

SIZE	PART#	D1	D2	L	T	C
8	Z-08M8	15	25	38	4	15
9	Z-08M9	16	25	38	4	15
10	Z-08M10	17	25	38	5	15
11	Z-08M11	19	21	38	5	15
12	Z-08M12	20	25	38	6	17
13	Z-08M13	21	25	38	6	17
14	Z-08M14	22	25	38	7	17
15	Z-08M15	24	30	38	7	19
16	Z-08M16	25	30	38	7	19
17	Z-08M17	26	30	38	9	19
18	Z-08M18	28	30	38	9	19
19	Z-08M19	28	30	38	9.5	19
20	Z-08M20	30	30	38	10	21
21	Z-08M21	30	30	38	10	21
22	Z-08M22	33	30	38	10	21
23	Z-08M23	35	30	38	12	23
24	Z-08M24	35	30	45	12	23
25	Z-08M25	35	30	45	13	24
26	Z-08M26	38	5	50	13	24
27	Z-08M27	38	35	50	13	24
28	Z-08M28	38	35	50	14	25
29	Z-08M29	41	35	50	14	28
30	Z-08M30	41	35	50	16.5	28
31	Z-08M31	44	35	50	16.5	28
32	Z-08M32	44	35	50	16.5	28
33	Z-08M33	44	35	50	17	28
34	Z-08M34	49	35	46	17	30
35	Z-08M35	49	35	50	19	31
36	Z-08M36	49	44	50	19	31
37	Z-08M37	52	44	47	19	31
38	Z-08M38	52	44	50	22	34

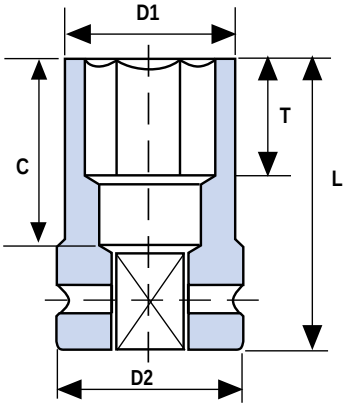

STANDARD METRIC THINWALL

SIZE	PART#	D1	D2	L	T	C
13	Z-08M13T	21	25	38	6	18
14	Z-08M14T	22	25	38	7	18
15	Z-08M15T	24	30	38	7	19
16	Z-08M16T	25	30	38	7	19
17	Z-08M17T	25	30	38	9	19
18	Z-08M18T	25	30	38	9	19
19	Z-08M19T	28	30	38	9	19
20	Z-08M20T	28	30	38	10	20
21	Z-08M21T	30	30	38	10	20
22	Z-08M22T	30	30	38	10	20
23	Z-08M23T	33	30	38	12	20
24	Z-08M24T	33	30	45	12	20

½" SQUARE DRIVE

SIX POINT IMPACT SOCKETS

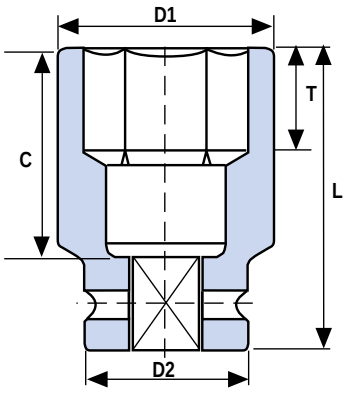

DEEP METRIC SIZES

SIZE	PART#	D1	D2	L	T	C
8	Z-08M8L	15	25	78	4	69
9	Z-08M9L	16	25	78	4	69
10	Z-08M10L	17	25	78	5	69
11	Z-08M11L	19	25	78	5	69
12	Z-08M12L	20	25	78	6	69
13	Z-08M13L	21	25	78	6	69
14	Z-08M14L	22	25	78	7	69
15	Z-08M15L	24	30	78	7	69
16	Z-08M16L	25	30	78	7	69
17	Z-08M17L	26	30	78	9	69
18	Z-08M18L	28	30	78	9	69
19	Z-08M19L	28	30	78	9.5	69
20	Z-08M20L	30	30	78	10	69
21	Z-08M21L	30	30	78	10	69
22	Z-08M22L	33	30	78	10	69
23	Z-08M23L	35	30	78	12	69
24	Z-08M24L	35	30	78	12	69
25	Z-08M25L	35	30	78	13	69
26	Z-08M26L	38	35	78	13	69
27	Z-08M27L	38	35	78	13	69
28	Z-08M28L	38	35	78	14	69
29	Z-08M29L	41	35	78	14	69
30	Z-08M30L	41	35	78	16.5	69
31	Z-08M31L	44	35	78	16.5	69
32	Z-08M32L	44	35	78	16.5	69
33	Z-08M33L	44	35	78	17	69
34	Z-08M34L	49	35	78	17	69
35	Z-08M35L	49	35	78	19	69
36	Z-08M36L	49	44	78	19	69
37	Z-08M37L	52	44	78	19	69
38	Z-08M38L	52	44	78	22	69

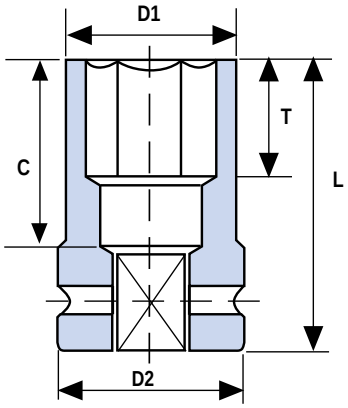

DEEP METRIC THINWALL

SIZE	PART#	D1	D2	L	T	C
13	Z-08M13LT	21	25	78	6	69
14	Z-08M14LT	22	25	78	7	69
15	Z-08M15LT	24	30	78	7	69
16	Z-08M16LT	25	30	78	7	69
17	Z-08M17LT	25	30	78	9	69
18	Z-08M18LT	25	30	78	9	69
19	Z-08M19LT	28	30	78	9	69
20	Z-08M20LT	28	30	78	10	69
21	Z-08M21LT	30	30	78	10	69
22	Z-08M22LT	30	30	78	10	69
23	Z-08M23LT	33	30	78	12	69
24	Z-08M24LT	33	30	78	12	69

½" SQUARE DRIVE

SIX POINT IMPACT SOCKETS

6 POINT STEEL/ALUMINUM IMPACT SOCKETS

NOMINAL OPENING			D1	D2	L	t min	Weight
mm	A/F Inch	CATALOG No.	mm	mm	mm	mm	gr
17		Z-08M17AP	26	30	50	25.0	110
19	3/4"	Z-0812M19AP	28	30	50	25.0	110
	13/16"	Z-0813AP	30	30	50	25.0	110
21		Z-08M21AP	30	30	50	25.0	110
	7/8"	Z-0814AP	33	33	50	25.0	130

Note: Non Marking Combo Sockets

6 POINT STEEL/ALUMINUM IMPACT SOCKETS

NOMINAL OPENING			D1	D2	L	t min	Weight
mm	A/F Inch	CATALOG No.	mm	mm	mm	mm	gr
17		Z-08M17LAP	26	30	85	25.0	200
19	3/4"	Z-0812M19LAP	28	30	85	25.0	210
	13/16"	Z-0813LAP	30	30	85	25.0	220
21		Z-08M21LAP	30	30	85	25.0	220
	7/8"	Z-0814LAP	33	33	85	25.0	250

Note: Non Marking Deep Combo Sockets

IMPACT SOCKETS FOR IN-STAR FASTENERS

NOMINAL OPENING		D1	D2	L	t min	Weight
TORX®	CATALOG No.	mm	mm	mm	mm	gr
E10	Z-08E10	15.0	25	38	9.0	85
E11	Z-08E11	15.5	25	38	9.0	85
E12	Z-08E12	16.0	25	38	10.0	91
E14	Z-08E14	18.5	25	38	12.0	91
E16	Z-08E16	20.0	25	38	12.0	95
E18	Z-08E18	22.0	25	38	12.0	95
E20	Z-08E20	25.0	30	38	13.0	140
E22	Z-08E22	26.5	30	45	15.0	158
E24	Z-08E24	28.5	30	45	17.0	161

SOCKET DRIVERS FOR IN-STAR FASTENERS

NOMINAL OPENING		D1	D2	L	t min	Weight
TORX®	CATALOG No.	mm	mm	mm	mm	gr
T30	Z-08T30	25	57	3.19		110
T40	Z-08T40	25	57	3.30		110
T50	Z-08T50	25	57	4.57		110
T55	Z-08T55	25	57	5.08		110
T60	Z-08T60	30	60	7.62		160
T70	Z-08T70	30	60	8.89		170

®TORX BIT is a registered trademark of Cam Car

HEX DRIVER SOCKETS

Bit Holders

PART#	DESCRIPTION
08H11	1/2" Sq. x 11mm Hex Bit Holders
08H16	1/2" Sq. x 16mm Hex Bit Holders

Replacement Hex Bits
For Sockets (2 Piece Inhex)

PART#	DESCRIPTION
H02	11mm Hex x 1/8"
H025	11mm Hex x 5/32"
H03	11mm Hex x 3/16"
H035	11mm Hex x 7/32"
H04	11mm Hex x 1/4"
H05	11mm Hex x 5/16"
H06	16mm Hex x 3/8"
H07	16mm Hex x 7/16"
H08	16mm Hex x 1/2"
H09	16mm Hex x 9/16"
H10	16mm Hex x 5/8"
H12	16mm Hex x 3/4"
H13	22mm Hex x 13/16"
H14	22mm Hex x 7/8"
H16	22mm Hex x 1"
H17	32mm Hex x 1-1/16"
H18	32mm Hex x 1-1/8"
H19	32mm Hex x 1-3/16"
H20	32mm Hex x 1-1/4"
HM03	11mm Hex x 3mm
HM04	11mm Hex x 4mm
HM05	11mm Hex x 5mm
HM06	11mm Hex x 6mm

Replacement Hex Bits For Sockets

PART#	DESCRIPTION
HM08	11mm Hex x 8mm
HM10	16mm Hex x 10mm
HM12	16mm Hex x 12mm
HM14	16mm Hex x 14mm
HM17	16mm Hex x 17mm
HM19	16mm Hex x 19mm
HM22	22mm Hex x 22mm
HM24	22mm Hex x 24mm
HM27	32mm Hex x 27mm
HM30	32mm Hex x 30mm
HM32	32mm Hex x 32mm

Replacement Instar TORX Bits

PART#	DESCRIPTION
HT30	11mm Hex x 30
HT40	11mm Hex x 40
HT50	11mm Hex x 50
HT55	16mm Hex x 55
HT60	16mm Hex x 60
HT70	16mm Hex x 70

½" SQUARE DRIVE

HEX DRIVER SOCKETS

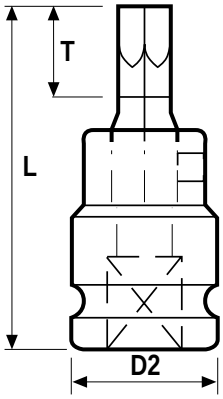

FRACTIONAL SIZES

SIZE	PART#	D2	L	T
1/8	Z-0802H	0.984	1.716	0.748
5/32	Z-08005H	0.984	1.716	0.748
3/16	Z-0803H	0.984	1.716	0.748
7/32	Z-08007H	0.984	1.716	0.748
1/4	Z-0804H	0.984	1.716	0.748
5/16	Z-0805H	0.984	1.716	0.748
3/8	Z-0806H	0.984	1.833	0.866
7/16	Z-0807H	0.984	1.950	0.984
1/2	Z-0808H	1.181	1.950	0.984
9/16	Z-0809H	1.181	1.950	0.984
5/8	Z-0810H	1.181	1.950	0.984

Note: 1 Piece Construction

METRIC SIZES

SIZE	PART#	D2	L	T
3	Z-08M3H	25	44	19
4	Z-08M4H	25	44	19
5	Z-08M5H	25	44	19
6	Z-08M6H	25	44	19
8	Z-08M8H	25	44	19
10	Z-08M10H	25	47	22
12	Z-08M12H	30	50	25
14	Z-08M14H	30	50	25
17	Z-08M17H	30	50	25
19	Z-08M19H	33	50	25

Note: 1 Piece Construction

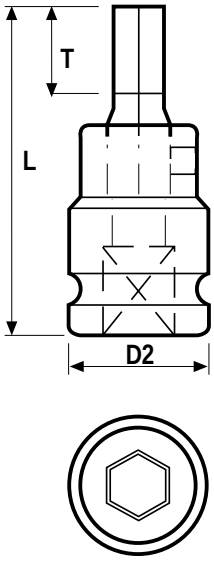

2 PART INHEX

NOMINAL OPENING			D2	L	T	Weight
mm	A/F Inch	CATALOG No.	mm	mm	mm	gr
	1/8"	Z-0802V	25	54	6	90
	5/32"	Z-08025V	25	54	6	90
	3/16"	Z-0803V	25	54	8	90
	7/32"	Z-08035V	25	54	9	90
	1/4"	Z-0804V	25	57	12	100
	5/16"	Z-0805V	25	57	12	100
	3/8"	Z-0806V	25	57	16	100
	7/16"	Z-0807V	25	57	18	100
	1/2"	Z-0808V	30	57	19	150
	9/16"	Z-0809V	30	57	21	150
	5/8"	Z-0810V	30	57	24	150
3		Z-08M03V	25	54	5	90
4		Z-08M04V	25	54	6	90
5		Z-08M05V	25	54	8	90
6		Z-08M06V	25	54	9	100
8		Z-08M08V	25	57	12	100
10		Z-08M10V	25	57	16	100
12		Z-08M12V	30	57	18	150
14		Z-08M14V	30	57	21	150
17		Z-08M17V	30	57	26	150
19		Z-08M19V	30	72	26	150

Note: 2 Piece Construction

12 POINT IMPACT SOCKETS

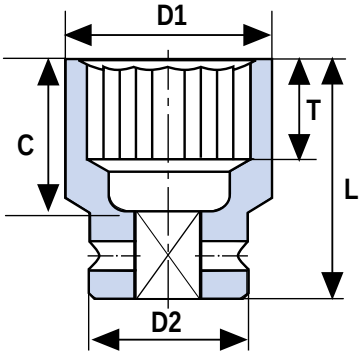

12 POINT IMPACT SOCKETS

NOMINAL OPENING			D1	D2	L	tmin	Weight
mm	A/F Inch	CATALOG No.	mm	mm	mm	mm	gr
	15/16"	DH-0815	35	35	38	13.0	160
	1 "	DH-0816	38	35	38	13.0	200
27	1/16"	DH-0817M27	38	35	50	13.0	200
	1-1/8"	DH-0818	41	35	40	16.5	290
30	1 3/16"	DH-0819M30	41	35	50	16.5	290
	1-1/4"	DH-0820	44	35	40	17.0	350
	1-5/16"	DH-0821	49	35	43	19.0	370
35	1-3/8"	DH-0822M35	49	35	50	19.0	370
	1-7/16"	DH-0823	49	44	50	19.0	370
38	1-1/2"	DH-0824M38	52	44	50	22.0	400

½" SQUARE DRIVE

ACCESSORIES

ADAPTERS

PART#	FEMALE	MALE	L
A0810	1/2	5/8	1.380
A0812	1/2	3/4	1.690

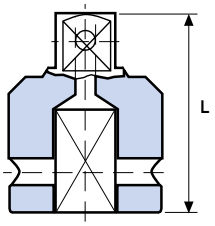

DOUBLE ENDED FEMALE ADAPTERS

PART#	D1	D2	L
AN0808	1/2	1/2	1.290
AN1008	1/2	5/8	1.610
AN1208	1/2	3/4	1.930

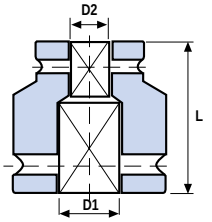

DOUBLE ENDED MALE ADAPTERS

PART#	D1	L
Z0802	0.661	2
Z0803	0.661	3
Z0805	0.661	5
Z0810	0.661	10

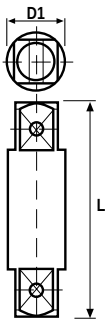

UNIVERSAL JOINT

SIZE	PART#
1/2	U0808

NEW

DOUBLE ENDED MALE ADAPTERS 7/16" Hex to 1/2" Square

PART#	D1	L
SO84874	0.661	2.26

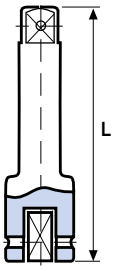

EXTENSIONS

PART#	L
E0803	3
E0805	5
E0810	10

RETAINING PINS AND RINGS

SQUARE DRIVE	THROUGH HEX SIZE	PIN #	RING#	d	L	D
1/2	9/16 - 14mm	P0825	R0825	.117	.780	.741
1/2	1-3/16 - 30mm	P0830	R0830	.117	.975	.936
1/2	Above 1-3/16	P0835	R0835	.117	1.170	1.170

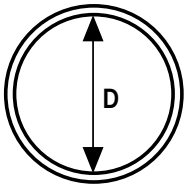

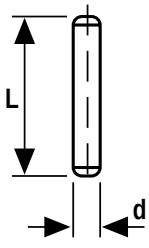

½" SQUARE DRIVE

UTILITY SOCKETS

UTILITY SOCKETS (POWER LINE SOCKETS)

Z-081315S5 - 13/16" x 15/16"
Z-081618S5 - 1" X 1-1/8"
Specifically designed for hydraulic wrenches and impact wrenches

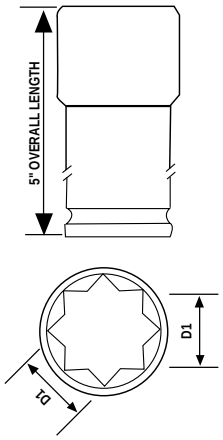

TIRE SHOP FLIP SOCKETS

TIRE SHOP FLIP SOCKETS

PART#	SIZE
D-1213	3/4 X 13/16
D-19M21	19mm x 21mm

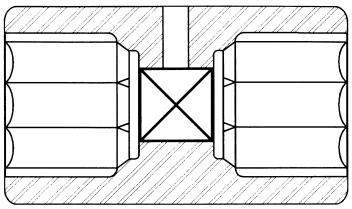

SOCKET SETS

FRACTIONAL

PART#	DESCRIPTION	INCLUDES:
Z-08S1	11 Piece with U-Joint	1/2, 9/16, 5/8, 11/16, 3/4, 13/16, 7/8 15/16, 1, 1-1/16, 1-1/8, U-Joint
Z-08S2	13 Piece	7/16, 1/2, 9/16, 5/8, 11/16, 3/4, 13/16, 7/8, 15/16, 1, 1-1/16, 1-1/8, 1-1/4
Z-08S3	7 Piece	7/16, 1/2, 9/16, 5/8, 11/16, 3/4, 13/16
Z-08LS1	14 Piece Deep	3/8, 7/16, 1/2, 9/16, 5/8, 11/16, 3/4, 13/16 7/8, 15/16, 1, 1-1/16, 1-1/8, 1-1/4
Z-08LS2	7 Piece Deep	7/16, 1/2, 9/16, 5/8, 11/16, 3/4, 13/16

METRIC

PART#	DESCRIPTION	INCLUDES:
Z-08MS1	13 Piece	8mm, 9, 10, 11, 12, 13, 14. 15, 16, 17, 18, 19, 21
Z-08MS2	16 Piece	10mm, 11, 12, 13, 14, 15, 16, 17, 18, 19, 20, 21, 22, 23, 24, 27
Z-08MS3	6 Piece	13mm, 14, 15, 16, 17, 18
Z-08LMS1	16 Piece Deep	10mm, 11, 12, 13, 14, 15, 16, 17, 18, 19, 20, 21, 22, 23, 24, 27
Z-08LMS2	12 Piece Deep	10mm 11, 12, 13, 14, 15, 16, 17, 18, 19, 20, 21

RETAINING RING®

Steel Insert Encapsulated To Reinforce Stress Point

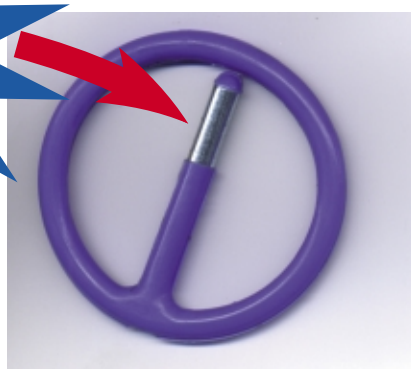

RET RING® SOCKET RETAINER FOR IMPACT WRENCHES

RET RING® W/ STEEL INSERTS	RET RING® DIAMETER	FOR USE ON SQUARE DRIVE
RR10005S	1-1/4"	3/4"
RR10032S	1-7/16"	3/4"
RR10034S	1-5/8"	3/4"
RR18708S	1-3/4"	3/4"
RR18710S	2"	3/4"
RR18715S	2-1/8"	3/4"
RR18716S	2-1/4"	3/4"
RR10008S	1-3/4"	1"
RR10010S	2"	1"
RR10015S	2-1/8"	1"
RR10016S	2-1/4"	1"
RR10017S	2-1/2"	1"
RR10019S	2-5/8"	1"
RR10020S	2-7/8"	1"
RR10025S	3-3/8"	1-1/2"
RR10030S	3-7/8"	1-1/2"
RR10035S	4-3/8"	1-1/2"

ATP OZAT ORANGE MAGNETIC

3/8" SQUARE DRIVE

6 POINT IMPACT SOCKETS MAGNETIC STANDARD

NOMINAL OPENING			D1	D2	L	t min
mm	A/F Inch	CATALOG No.	IN	IN	IN	IN
6		Z-06M06M	.43	.75	1.18	.118
7		Z-06M07M	.49	.75	1.18	.118
8		Z-06M08M	.57	.75	1.18	.157
9		Z-06M09M	.59	.75	1.18	.157
	3/8"	Z-0606M	.49	.75	1.18	.157
10		Z-06M10M	.62	.75	1.18	.196
11		Z-06M11M	.68	.75	1.18	.196
	7/16"	Z-0607M	.66	.75	1.18	.236
12		Z-06M12M	.75	.75	1.18	.236
	1/2"	Z-0608M	.75	.75	1.18	.236
13		Z-06M13M	.78	.86	1.18	.236
14		Z-06M14M	.82	.86	1.18	.275
	9/16"	Z-0609M	.78	.78	1.18	.275
15		Z-06M15M	.86	.86	1.18	.275
	5/8"	Z-0610M	.94	.94	1.18	.314
16		Z-06M16M	.94	.86	1.18	.275
17		Z-06M17M	.98	.86	1.18	.354
	11/16"	Z-0611M	.94	.94	1.18	.354
18		Z-06M18M	1.02	.86	1.18	.354
19	3/4"	Z-0612M19M	1.08	.86	1.18	.375

6 POINT IMPACT SOCKETS MAGNETIC DEEP

NOMINAL OPENING			D1	D2	L	t min
mm	A/F Inch	CATALOG No.	IN	IN	IN	IN
6		Z-06M06LM	.43	.75	2.24	.118
7		Z-06M07LM	.49	.75	2.55	.118
8		Z-06M08LM	.57	.75	2.55	.157
9		Z-06M09LM	.59	.75	2.55	.157
	3/8"	Z-0606LM	.49	.75	2.55	.157
10		Z-06M10LM	.62	.75	2.55	.196
11		Z-06M11LM	.68	.75	2.55	.196
	7/16"	Z-0607LM	.66	.75	2.55	.236
12		Z-06M12LM	.75	.75	2.55	.236
	1/2"	Z-0608LM	.75	.75	2.55	.236
13		Z-06M13LM	.78	.86	2.55	.236
14		Z-06M14LM	.82	.86	2.55	.275
	9/16"	Z-0609LM	.78	.78	2.55	.275
15		Z-06M15LM	.86	.86	2.55	.275
	5/8"	Z-0610LM	.94	.94	2.55	.314
16		Z-06M16LM	.94	.86	2.55	.275
17		Z-06M17LM	.98	.86	2.55	.354
	11/16"	Z-0611LM	.94	.94	2.55	.354
18		Z-06M18LM	1.02	.86	2.55	.354
19	3/4"	Z-0612M19LM	1.08	.86	2.55	.375

1/2" SQUARE DRIVE

6 POINT IMPACT SOCKETS MAGNETIC STANDARD

NOMINAL OPENING			D1	D2	L	t min
mm	A/F Inch	CATALOG No.	IN	IN	IN	IN
	3/8"	Z-0806M	.62	.86	1.49	.157
10		Z-08M10M	.68	.98	1.49	.196
11		Z-08M11M	.78	.98	1.49	.196
	7/16"	Z-0807M	.70	.86	1.49	.236
12		Z-08M12M	.78	.98	1.49	.236
	1/2"	Z-0808M	.78	.86	1.49	.236
13		Z-08M13M	.82	.98	1.49	.236
14		Z-08M14M	.88	.98	1.49	.275
	9/16"	Z-0809M	.86	.94	1.49	.275
15		Z-08M15M	.93	1.18	1.49	.275
	5/8"	Z-0810M	.98	.98	1.49	.314
16		Z-08M16M	.98	1.18	1.49	.314
17		Z-08M17M	1.02	1.18	1.49	.354
	11/16"	Z-0811M	1.02	1.02	1.49	.354
18		Z-08M18M	1.08	1.18	1.49	.354
19	3/4"	Z-0812M19M	1.12	1.18	1.49	.357

6 POINT IMPACT SOCKETS MAGNETIC DEEP

NOMINAL OPENING			D1	D2	L	t min
mm	A/F Inch	CATALOG No.	IN	IN	IN	IN
	3/8"	Z-0806LM	.62	.86	3.07	.157
10		Z-08M10LM	.68	.98	3.07	.196
11		Z-08M11LM	.78	.98	3.07	.196
	7/16"	Z-0807LM	.70	.86	3.07	.236
12		Z-08M12LM	.78	.98	3.07	.236
	1/2"	Z-0808LM	.78	.86	3.07	.236
13		Z-08M13LM	.82	.98	3.07	.236
14		Z-08M14LM	.88	.98	3.07	.275
	9/16"	Z-0809LM	.86	.94	3.07	.275
15		Z-08M15LM	.93	1.18	3.07	.275
	5/8"	Z-0810LM	.98	.98	3.07	.314
16		Z-08M16LM	.98	1.18	3.07	.314
17		Z-08M17LM	1.02	1.18	3.07	.354
	11/16"	Z-0811LM	1.02	1.02	3.07	.354
18		Z-08M17LM	1.08	1.18	3.07	.354
19	3/4"	Z-0812M19LM	1.12	1.18	3.07	.375

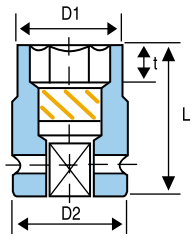

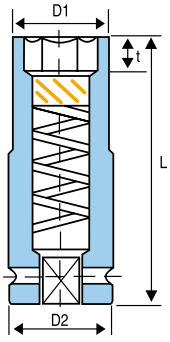

5/8" SQUARE DRIVE

SIX POINT IMPACT SOCKETS

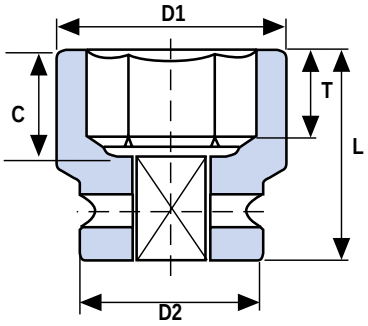

STANDARD FRACTIONAL SIZES

SIZE	PART#	D1	D2	L	T	C
1/2	Z-1008	0.906	1.378	1.365	0.236	0.753
9/16	Z-1009	0.945	1.378	1.365	0.275	0.753
5/8	Z-1010	1.024	1.378	1.365	0.315	0.753
11/16	Z-1011	1.142	1.378	1.482	0.354	0.871
3/4	Z-1012	1.220	1.378	1.482	0.375	0.871
13/16	Z-1013	1.299	1.378	1.482	0.433	0.871
7/8	Z-1014	1.378	1.378	1.560	0.512	0.950
15/16	Z-1015	1.378	1.378	1.560	0.512	0.950
1	Z-1016	1.496	1.378	1.600	0.512	0.989
1-1/16	Z-1017	1.614	1.378	1.600	0.512	0.989
1-1/8	Z-1018	1.614	1.378	1.638	0.650	1.147
1-3/16	Z-1019	1.732	1.378	1.638	0.650	1.147
1-1/4	Z-1020	1.732	1.378	1.794	0.669	1.186
1-5/16	Z-1021	1.929	1.378	1.911	0.748	1.265
1-3/8	Z-1022	1.929	1.378	1.989	0.748	1.383
1-7/16	Z-1023	2.047	1.732	1.989	0.748	1.383
1-1/2	Z-1024	2.126	1.732	1.989	0.866	1.383

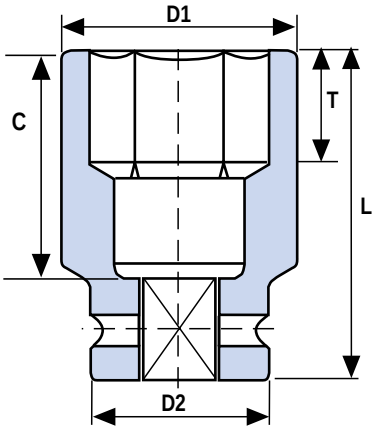

DEEP FRACTIONAL SIZES

SIZE	PART#	D1	D2	L	T	C
1/2	Z-1008L	0.906	1.378	3.465	0.236	2.840
9/16	Z-1009L	0.945	1.378	3.465	0.275	2.840
5/8	Z-1010L	1.024	1.378	3.465	0.315	2.840
11/16	Z-1011L	1.142	1.378	3.465	0.354	2.840
3/4	Z-1012L	1.220	1.378	3.465	0.375	2.840
13/16	Z-1013L	1.299	1.378	3.465	0.433	2.840
7/8	Z-1014L	1.378	1.378	3.465	0.512	2.840
15/16	Z-1015L	1.378	1 378	3.465	0.512	2.840
1	Z-1016L	1.496	1 378	3.465	0.512	2.840
1-1/16	Z-1017L	1.614	1.378	3 465	0.512	2.840
1-1/8	Z-1018L	1.614	1.378	3 465	0.650	2.840
1 -3/16	Z-1019L	1.732	1 378	3.465	0.650	2.840
1-1/4	Z-1020L	1.732	1.378	3.465	0.669	2.840
1 -5/16	Z-1021L	1.929	1 378	3.465	0.748	2.840
1 -3/8	Z-1022L	1.929	1.378	3.465	0.748	2.840
1-7/16	Z-1023L	2.047	1 732	3.465	0.748	2.840
1-1/2	Z-1024L	2.126	1.732	3.465	0.866	2.840

Why 5/8" drive? This unusual drive size was originally introduced in the 1930's to eliminate the "disappearing socket syndrome". It remains popular in several applications today for the heavier wall thickness than comparable 1/2" drive sockets.

5/8" SQUARE DRIVE

SIX POINT IMPACT SOCKETS

STANDARD METRIC SIZES

SIZE	PART#	D1	D2	L	T	C
13	Z-10M13	23	35	35	6	19
14	Z-10M14	24	35	35	7	19
15	Z-10M15	26	35	35	7	19
16	Z-10M16	26	35	35	7	19
17	Z-10M17	28	35	38	9	22
18	Z-10M18	30	35	38	9	22
19	Z-10Ml9	31	35	38	9.5	22
20	Z-10M20	32	35	38	10	22
21	Z-10M21	33	35	38	10	22
22	Z-10M22	35	35	40	10	24
23	Z-10M23	35	35	40	12	24
24	Z-10M24	35	35	40	12	24
25	Z-10M25	38	35	41	13	25
26	Z-10M26	38	35	41	13	25
27	Z-10M27	41	35	42	13	25
28	Z-10M28	41	35	42	14	26
29	Z-10M29	41	35	45	14	29
30	Z-10M30	44	35	45	16.5	29
31	Z-10M31	44	35	46	16.5	42
32	Z-10M32	44	35	47	16.5	42
33	Z-10M33	44	35	47	17	31
34	Z-10M34	49	35	50	17	34
35	Z-10M35	49	35	51	19	35
36	Z-10M36	52	35	51	19	35
37	Z-10M37	54	44	51	19	35
38	Z-10M38	54	44	51	22	35

DEEP METRIC SIZES

SIZE	PART#	D1	D2	L	T	C
13	Z-10M13L	23	35	88	6	72
14	Z-10M14L	24	35	88	7	72
15	Z-10M15L	26	35	88	7	72
16	Z-10M16L	26	35	88	7	72
17	Z-10M17L	28	35	88	9	72
18	Z-10M18L	30	35	88	9	72
19	Z-10M19L	31	35	88	9.5	72
20	Z-10M20L	32	35	88	10	72
21	Z-10M21L	33	35	88	10	72
22	Z-10M22L	35	35	88	10	72
23	Z-10M23L	35	35	88	12	72
24	Z-10M24L	35	35	88	12	72
25	Z-10M25L	38	35	88	13	72
26	Z-10M26L	38	35	88	13	72
27	Z-10M27L	41	35	88	13	72
28	Z-10M28L	41	35	88	14	72
29	Z-10M29L	41	35	88	14	72
30	Z-10M30L	44	35	88	16.5	72
31	Z-10M31L	44	35	88	16.5	72
32	Z-10M32L	44	35	88	16.5	72
33	Z-10M33L	44	35	88	17	72
34	Z-10M34L	49	35	88	17	72
35	Z-10M35L	49	35	88	19	72
36	Z-10M36L	52	35	88	19	72
37	Z-10M37L	54	44	88	19	72
38	Z-10M38L	54	44	88	22	72

ACCESSORIES

UNIVERSAL JOINT

SIZE	PART#
5/8	U1010

ADAPTERS

PART#	FEMALE	MALE	L
A1008	5/8	1/2	1.900
A1012	5/8	3/4	1.770

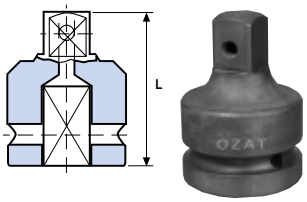

RETAINING PINS AND RINGS

SQUARE DRIVE	THROUGH HEX SIZE	PIN #	RING#	d	L	D
5/8	1-3/16 - 30mm	P1035	R1035	.117	1.070	1.092
5/8	Above 1-3/16	P1044	R1044	.117	1.521	1.443

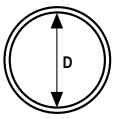

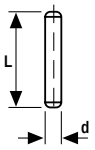

DOUBLE ENDED FEMALE ADAPTERS

PART#	D1	D2	L
AN1008	1/2	5/8	1.299
AN1010	5/8	5/8	1.378
AN1012	5/8	3/4	1.969

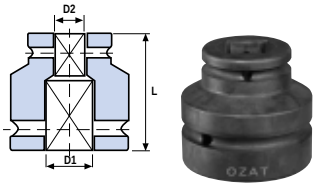

DOUBLE ENDED MALE EXTENSIONS

PART#	D1	L
Z1002	0.830	2
Z1003	0.830	3
Z1006	0.830	6
Z1012	0.830	12

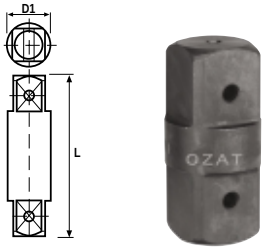

3/4" SQUARE DRIVE

SIX POINT IMPACT SOCKETS

STANDARD FRACTIONAL SIZES

SIZE	PART#	D1	D2	L	T	C
1/2	Z-1208	0.945	1.732	1.755	0.236	0.772
9/16	Z-1209	0.984	1.732	1.755	0.276	0.772
5/8	Z-1210	1.102	1.732	1.755	0.315	0.772
11/16	Z-1211	1.142	1.732	1.755	0.354	0.772
3/4	Z-1212	1.260	1.732	1.755	0.372	0.772
13/16	Z-1213	1.378	1.732	1.794	0.433	0.890
7/8	Z-1214	1.496	1.732	1.794	0.512	0.890
15/16	Z-1215	1 575	1.732	1.794	0.512	0.890
1	Z-1216	1.614	1.732	1.794	0.512	0.890
1-1/16	Z-1217	1.732	1.732	2.028	0.512	1.047
1-1/8	Z-1218	1.732	1.732	2.028	0.650	1.047
1-3/16	Z-1219	1.732	1.732	2.028	0.650	1.047
1-1/4	Z-1220	1.929	1.732	2.028	0.650	1.047
1-5/16	Z-1221	1.929	1.732	2.145	0.748	1.165
1-3/8	Z-1222	2.047	1.732	2.145	0.748	1.165
1-7/16	Z-1223	2.047	1.732	2.184	0.748	1.205
1-1/2	Z-1224	2.126	1.732	2.301	0.866	1.283
1-9/16	Z-1225	2.244	1.732	2.301	0.866	1.283
1-5/8	Z-1226	2.244	1.732	2.301	0.866	1.283
1-11/16	Z-1227	2.480	1.732	2.496	0.984	1.441
1-3/4	Z-1228	2.480	1.732	2.496	0.995	1.480
1-13/16	Z-1229	2.638	1.732	2.496	0.995	1.480
1-7/8	Z-1230	2.638	2.126	2.613	1.062	1.598
1-15/16	Z-1231	2.756	2.126	2.613	1.062	1.598
2	Z-1232	2.874	2.126	2.613	1.062	1.598
2-1/16	Z-1233	2.874	2.126	2.769	1.181	1.756
2-1/8	Z-1234	2.874	2.126	2.769	1.181	1.795
2-3/16	Z-1235	3.071	2.126	2.886	1.260	1.795.
2-1/4	Z-1236	3.228	2.126	2.925	1.299	1.913
2-5/16	Z-1237	3.228	2.126	2.925	1.299	1.953
2-3/8	Z-1238	3.228	2.126	2.925	1.378	1.953

DEEP FRACTIONAL SIZES

SIZE	PART#	D1	D2	L	T	C
1/2	Z-1208L	0.945	1.732	3.510	0.236	2.543
9/16	Z-1209L	0.984	1.732	3.510	0.276	2 543
5/8	Z-1210L	1.102	1.732	3.510	0.315	2.543
11/16	Z-1211L	1.142	1.732	3.510	0.354	2.543
3/4	Z-1212L	1.260	1.732	3.510	0.372	2.543
13/16	Z-1213L	1.378	1.732	3.510	0.433	2.543
7/8	Z-1214L	1.496	1.732	3.510	0.512	2.543
15/16	Z-1215L	1.575	1.732	3.510	0.512	2.543
1	Z-1216L	1.614	1.732	3.510	0.512	2.543
1-1/16	Z-1217L	1.732	1.732	3.510	0.512	2.543
1-1/8	Z-1218L	1.732	1.732	3.510	0.650	2.543
1-3/16	Z-1219L	1.732	1.732	3.510	0.650	2.543
1-1/4	Z-1220L	1.929	1.732	3.510	0.669	2.543
1-5/16	Z-1221L	1.929	1.732	3.510	0.748	2.543
1-3/8	Z-1222L	2.047	1.732	3.510	0.748	2.543
1-7/16	Z-1223L	2.047	1.732	3.510	0.748	2.543
1-1/2	Z-1224L	2.126	1.732	3.510	0.866	2.543
1-9/16	Z-1225L	2.244	1.732	3.510	0.866	2.543
1-5/8	Z-1226L	2.244	1.732	3.510	0.866	2.543
1-11/16	Z-1227L	2.480	1.732	3.510	0.984	2.543
1-3/4	Z-1228L	2.480	1.732	3.510	0.995	2.543
1-13/16	Z-1229L	2.638	1.732	3.510	0.995	2.543
1-7/8	Z-1230L	2.638	2.126	3.510	1.062	2.543
1-15/16	Z-1231L	2.756	2.126	3.510	1.062	2.543
2	Z-1232L	2.874	2.126	3.510	1.062	2.543
2-1/16	Z-1233L	2.874	2.126	3.666	1.181	2.701
2-1/8	Z-1234L	2.874	2.126	3.666	1.181	2.740
2-3/16	Z-1235L	3.071	2.126	3.666	1.260	2.740
2-1/4	Z-1236L	3.228	2.126	3.822	1.299	2.858
2-5/16	Z-1237L	3.228	2.126	3.822	1.299	2.898
2-3/8	Z-1238L	3.228	2.126	3.822	1.378	2.898

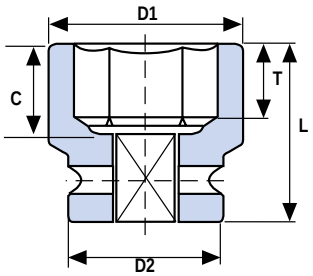

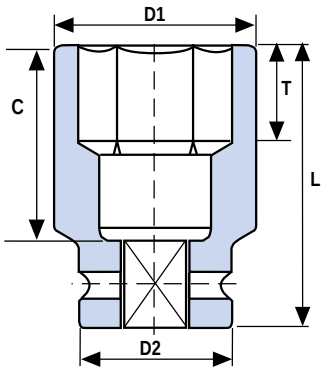

OZAT 3/4" drive sockets (and larger) are also available by special order as Spark Resistant for use in mines, chemical plants, grain processors and anywhere explosive conditions exist.

3/4" SQUARE DRIVE

SIX POINT IMPACT SOCKETS

STANDARD METRIC SIZES

SIZE	PART#	D1	D2	L	T	C
13	Z-12M13	25	44	45	6	20
14	Z-12M14	25	44	45	7	20
15	Z-12M15	28	44	45	7	20
16	Z-12M16	29	44	45	7	20
17	Z-12M17	29	44	45	9	20
18	Z-12M18	32	44	45	9.5	20
19	Z-12M19	32	44	45	9.5	20
20	Z-12M20	35	44	46	10	21
21	Z-12M21	35	44	46	10	21
22	Z-12M22	38	44	46	10	21
23	Z-12M23	38	44	46	12	21
24	Z-12M24	40	44	46	12	21
25	Z-12M25	41	44	46	13	21
26	Z-12M26	41	44	46	13	21
27	Z-12M27	41	44	48	13	23
28	Z-12M28	44	44	48	14	23
29	Z-12M29	44	44	52	14	27
30	Z-12M30	44	44	52	16.5	27
31	Z-12M31	49	44	52	16.5	27
32	Z-12M32	49	44	52	16.5	27
33	Z-12M33	49	44	55	17	30
34	Z-12M34	52	44	55	17	30
35	Z-12M35	52	44	55	19	30
36	Z-12M36	52	44	56	19	31
37	Z-12M37	54	44	56	19	31
38	Z-12M38	54	44	59	22	34
39	Z-12M39	57	44	59	21.5	34
40	Z-12M40	57	44	59	21.5	34
41	Z-12M41	57	44	59	22	34
42	Z-12M42	60	44	59	21.5	34
43	Z-12M43	63	44	64	25	39
44	Z-12M44	63	44	64	21.5	39
45	Z-12M45	63	44	64	21.5	39
46	Z-12M46	67	44	64	25.5	39
47	Z-12M47	67	54	64	23.5	39
48	Z-12M48	67	54	67	23.5	42
49	Z-12M49	70	54	67	27	42
50	Z-12M50	70	54	67	23.5	42
51	Z-12M51	73	54	67	27	42
52	Z-12M52	73	54	70	27	45
54	Z-12M54	78	54	71	30	46
55	Z-12M55	78	54	71	27	46
56	Z-12M56	78	54	74	28	49
57	Z-12M57	82	54	75	33	50
58	Z-12M58	82	54	75	28	50
59	Z-12M59	82	54	75	33	50
60	Z-12M60	82	54	75	28	50
61	Z-12M61	86	54	75	28	50

DEEP METRIC SIZES

SIZE	PART#	D1	D2	L	T	C
13	Z-12M13L	25	44	90	6	65
14	Z-12M14L	25	44	90	7	65
15	Z-12M15L	28	44	90	7	65
16	Z-12M16L	29	44	90	7	65
17	Z-12M17L	29	44	90	9	65
18	Z-12M18L	32	44	90	9	65
19	Z-12M19L	32	44	90	9.5	65
20	Z-12M20L	35	44	90	10	65
21	Z-12M21L	35	44	90	10	65
22	Z-12M22L	38	44	90	10	65
23	Z-12M23L	38	44	90	12	65
24	Z-12M24L	40	44	90	12	65
25	Z-12M25L	41	44	90	13	65
26	Z-12M26L	41	44	90	13	65
27	Z-12M27L	41	44	90	13	65
28	Z-12M28L	44	44	90	14	65
29	Z-12M29L	44	44	90	14	65
30	Z-12M30L	44	44	90	16.5	65
31	Z-12M31L	49	44	90	16.5	65
32	Z-12M32L	49	44	90	16.5	65
33	Z-12M33L	49	44	90	17	65
34	Z-12M34L	52	44	90	17	65
35	Z-12M35L	52	44	90	19	65
36	Z-12M36L	52	44	90	19	65
37	Z-12M37L	54	44	90	19	65
38	Z-12M38L	54	44	90	22	65
39	Z-12M39L	57	44	90	21.5	65
40	Z-12M40L	57	44	90	21.5	65
41	Z-12M41L	57	44	90	22	65
42	Z-12M42L	60	44	90	21.5	65
43	Z-12M43L	63	44	90	25	65
44	Z-12M44L	63	44	90	21.5	65
45	Z-12M45L	63	44	90	21.5	65
46	Z-12M46L	67	44	90	25.5	65
47	Z-12M47L	67	54	90	23.5	65
48	Z-12M48L	67	54	90	23.5	65
49	Z-12M49L	70	54	90	27	65
50	Z-12M50L	70	54	90	23.5	65
51	Z-12M51L	73	54	94	27	65
52	Z-12M52L	73	54	94	27	65
54	Z-12M54L	78	54	94	30	69
55	Z-12M55L	78	54	94	27	69
56	Z-12M56L	78	54	98	28	69
57	Z-12M57L	82	54	98	33	73
58	Z-12M58L	82	54	98	28	73
59	Z-12M59L	82	54	98	33	73
60	Z-12M60L	82	54	98	28	73
61	Z-12M61L	86	54	98	28	73

BUDD WHEEL SOCKETS

SIZE	PART#	D1	D2	L	T
13/16	Z-1213B	1.653	1.732	1.950	0.433
13/16	Z-1213B	1.653	1.732	3.510	0.433
13/16 X 1-1/12	Z-1224BS	2.126	1.732	3.510	0.571

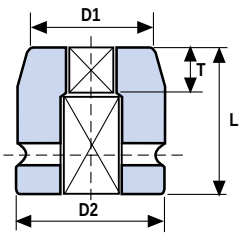

3/4" SQUARE DRIVE

SIX POINT IMPACT SOCKETS

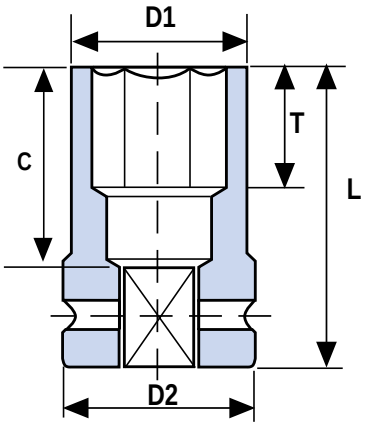

STANDARD FRACTIONAL THINWALL

SIZE	PART#	D1	D2	L	T	C
11/16	Z-1211T	1.102	1.732	1.755	0.354	0.969
3/4	Z-1212T	1.181	1.732	1.755	0.375	0.969
13/16	Z-1213T	1.378	1.732	1.794	0.433	0.969
7/8	Z-1214T	1.378	1.732	1.794	0.512	0.969
15/16	Z-1215T	1.378	1.732	1.794	0.512	0.969
1	Z-1216T	1.496	1.732	1.794	0.512	0.969
1-1/16	Z-1217T	1.614	1.732	1.872	0 512	1.047
1-1/8	Z-1218T	1.614	1.732	2.028	0.650	1.047
1-3/16	Z-1219T	1.732	1.732	2.028	0.650	1.047
1-1/4	Z-1220T	1.732	1.732	2.028	0.669	1.047
1-5/16	Z-1221T	1 929	1.732	2.145	0.748	1.165
1-3/8	Z-1222T	2.047	1.732	2.145	0.748	1.165
1-7/16	Z-1223T	2.047	1.732	2.184	0.748	1.205
1-1/2	Z-1224T	2.126	1.732	2.301	0.866	1.283
1-9/16	Z-1225T	2.126	1.732	2.301	0.866	1.283
1-5/8	Z-1226T	2.126	1.732	2.301	0.866	1.283
1-11/16	Z-1227T	2.362	1.732	2.496	0.984	1.441
1-3/4	Z-1228T	2.362	1.732	2.496	0.995	1.480
1-13/16	Z-1229T	2.480	1.732	2.496	0.995	1.480

STANDARD METRIC THINWALL

SIZE	PART#	D1	D2	L	T	C
17	Z-12M17T	28	44	45	9	20
18	Z-12M18T	30	44	45	9	20
19	Z-12M19T	30	44	45	9.5	21
20	Z-12M20T	30	44	46	10	21
21	Z-12M21T	35	44	46	10	21
22	Z-12M22T	35	44	46	10	21
23	Z-12M23T	35	44	46	12	21
24	Z-12M24T	38	44	46	12	21
25	Z-12M25T	38	44	46	13	21
26	Z-12M26T	41	44	46	13	21
27	Z-12M27T	41	44	48	13	23
28	Z-12M28T	41	44	48	14	23
29	Z-12M29T	41	44	52	14	27
30	Z-12M30T	41	44	52	16.5	27
31	Z-12M31T	44	44	52	16.5	27
32	Z-12M32T	48	44	52	16.5	27
33	Z-12M33T	48	44	55	17	30
34	Z-12M34T	49	44	55	17	30
35	Z-12M35T	50	44	55	19	30
36	Z-12M36T	52	44	56	19	31
37	Z-12M37T	52	44	56	19	31
38	Z-12M38T	52	44	59	22	34
39	Z-12M39T	54	44	59	21.5	34
40	Z-12M40T	54	44	59	21.5	34
41	Z-12M41T	54	44	59	22	34
42	Z-12M42T	57	44	59	21.5	34
43	Z-12M43T	60	44	64	25	39
44	Z-12M44T	60	44	64	21 5	39
45	Z-12M45T	60	44	64	21.5	39
46	Z-12M46T	63	44	64	25.5	39

SIX POINT IMPACT SOCKETS

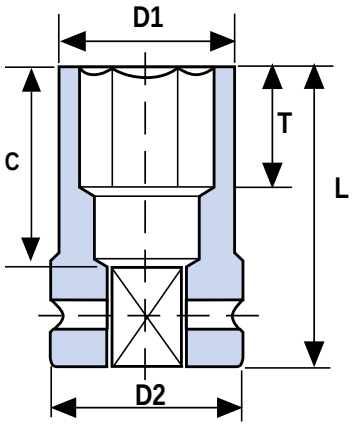

DEEP FRACTIONAL THINWALL

SIZE	PART#	D1	D2	L	T	C
11/16	Z-1211LT	1.102	1.732	3.510	0.709	2.543
3/4	Z-1212LT	1.181	1.732	3.510	0.748	2.543
13/16	Z-1213LT	1.378	1.732	3.510	0.866	2.543
7/8	Z-1214LT	1.378	1.732	3.510	1.024	2.543
15/16	Z-1215LT	1.378	1.732	3.510	1.024	2.543
1	Z-1216LT	1.496	1.732	3.510	1.024	2.543
1-1/16	Z-1217LT	1.614	1.732	3.510	1.024	2.543
1-1/8	Z-1218LT	1.614	1.732	3.510	1.299	2.543
1-3/16	Z-1219LT	1.732	1 732	3.510	1.299	2.543
1-1/4	Z-1220LT	1.732	1.732	3.510	1.339	2.543
1-5/16	Z-1221LT	1.929	1.732	3.510	1.496	2.543
1-3/8	Z-1222LT	2.047	1.732	3.510	1.496	2.543
1-7/16	Z-1223LT	2.047	1.732	3.510	1.496	2.543
1-1/2	Z-1224LT	2.126	1.732	3.510	1.732	2.543
1-9/16	Z-1225LT	2.126	1.732	3.510	1.732	2.543
1-5/8	Z-1226LT	2.126	1.732	3.510	1.732	2.543
1-11/16	Z-1227LT	2.362	1.732	3.510	1.969	2.543
1-3/4	Z-1228LT	2.362	1.732	3.510	2.008	2.543
1-13/16	Z-1229LT	2.480	1.732	3.510	2.008	2.543

DEEP METRIC THINWALL

SIZE	PART#	D1	D2	L	T	C
17	Z-12M17LT	28	44	90	18	65
18	Z-12M18LT	30	44	90	18	65
19	Z-12M19LT	30	44	90	19	65
20	Z-12M20LT	30	44	90	20	65
21	Z-12M21LT	35	44	90	20	65
22	Z-12M22LT	35	44	90	20	65
23	Z-12M23LT	35	44	90	24	65
24	Z-12M24LT	38	44	90	24	65
25	Z-12M25LT	38	44	90	26	65
26	Z-12M26LT	41	44	90	26	65
27	Z-12M27LT	41	44	90	26	65
28	Z-12M28LT	41	44	90	28	65
29	Z-12M29LT	41	44	90	28	65
30	Z-12M30LT	41	44	90	33	65
31	Z-12M31LT	44	44	90	33	65
32	Z-12M32LT	48	44	90	33	65
33	Z-12M33LT	48	44	90	34	65
34	Z-12M34LT	49	44	90	34	65
35	Z-12M35LT	50	44	90	38	65
36	Z-12M36LT	52	44	90	38	65
37	Z-12M37LT	52	44	90	38	65
38	Z-12M38LT	52	44	90	44	65
39	Z-12M39LT	54	44	90	43	65
40	Z-12M40LT	54	44	90	43	65
41	Z-12M41LT	54	44	90	44	65
42	Z-12M42LT	57	44	90	43	65
43	Z-12M43LT	60	44	90	50	65
44	Z-12M44LT	60	44	90	43	65
45	Z-12M45LT	60	44	90	43	65
46	Z-12M46LT	63	44	90	51	65

3/4" SQUARE DRIVE

HEX DRIVER SOCKETS

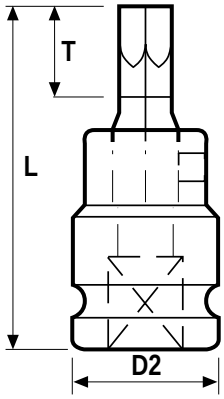

FRACTIONAL SIZES

SIZE	PART#	D2	L	T
3/8	Z-1206H	1.496	2.637	1.130
7/16	Z-1207H	1.496	2.637	1.130
1/2	Z-1208H	1.496	2.637	1.130
9/16	Z-1209H	1.496	2.637	1.130
5/8	Z-1210H	1.496	2.637	1.130
3/4	Z-1212H	1.732	2.637	1.130
13/16	Z-1213H	1.732	2.795	1.295
7/8	Z-1214H	1.732	2.795	1.295
1	Z-1216H	1.732	2.795	1.295

Note: 1 Piece Construction

METRIC SIZES

SIZE	PART#	D2	L	T
10	Z-12M10H	38	67	29
12	Z-12M12H	38	67	29
14	Z-12M14H	38	67	29
17	Z-12M17H	38	67	29
19	Z-12M19H	44	67	29
22	Z-12M22H	44	71	33
24	Z-12M24H	44	71	33

Note: 1 Piece Construction

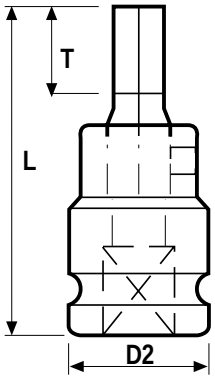

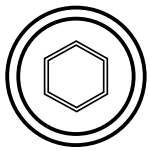

2 PART INHEX

NOMINAL OPENING			D2	L	T	Weight
mm	A/F Inch	CATALOG No.	mm	mm	mm	gr
	3/8"	Z-1206V	38	69	16	310
	7/16"	Z-1207V	38	69	18	310
	1/2"	Z-1208V	38	69	19	310
	9/16"	Z-1209V	38	69	21	310
	5/8"	Z-1210V	38	69	24	310
	3/4"	Z-1212V	44	69	26	630
	13/16"	Z-1213V	44	84	26	630
	7/8"	Z-1214V	44	84	26	630
	1"	Z-1216V	44	104	30	630
10		Z-12M10V	38	69	16	310
12		Z-12M12V	38	69	18	310
14		Z-12M14V	38	69	21	310
17		Z-12M17V	38	69	26	310
19		Z-12M19V	44	84	26	630
22		Z-12M22V	44	84	26	630
24		Z-12M24V	44	84	26	630

Note: 2 Piece Construction

DOUBLE SQUARE IMPACT EIGHT POINT SOCKETS

STANDARD FRACTIONAL SIZES

SIZE	PART#	D1	D2	L	T	C
1-1/4	DS-1220	2.362	1.732	2.067	0.669	1.087
1-5/16	DS-1221	2.480	1.732	2.067	0.748	1.087
1-3/8	DS-1222	2.638	1.732	2.067	0.748	1.087
1-7/16	DS-1223	2.638	1.732	2.223	0.748	1.244
1-1/2	DS-1224	2.638	1.732	2.223	0.866	1.244
1-9/16	DS-1225	3.071	2.126	2.223	0.866	1.244
1-5/8	DS-1226	3.071	2.126	2.223	0.866	1.244
1-11/16	DS-1227	3.228	2.126	2.418	0.984	1.441
1-3/4	DS-1228	3.228	2.126	2.457	1.005	1.480
1-13/16	DS-1229	3.228	2.126	2.457	1.005	1.480
1-7/8	DS-1230	3.228	2.126	2.535	1.063	1.559

DEEP FRACTIONAL SIZES

SIZE	PART#	D1	D2	L	T	C
1-1/4	DS-1220L	2.362	1.732	3.159	0.669	2.189
1-5/16	DS-1221L	2.480	1.732	3.159	0.748	2.189
1-3/8	DS-1222L	2.638	1.732	3.159	0.748	2.189
1-7/16	DS-1223L	2.638	1.732	3.159	0.748	2.189
1-1/2	DS-1224L	2.638	1.732	3.159	0.866	2.189
1-9/16	DS-1225L	3.071	2.126	3.159	0.866	2.189
1-5/8	DS-1226L	3.071	2.126	3.159	0.866	2.189
1-11/16	DS-1227L	3.228	2.126	3.159	0.984	2.189
1-3/4	DS-1228L	3.228	2.126	3.159	1.005	2.189
1-13/16	DS-1229L	3.228	2.126	3.159	1.005	2.189
1-7/8	DS-1230L	3.228	2.126	3.159	1.063	2.189

12 POINT IMPACT SOCKETS

12 POINT IMPACT SOCKETS REGULAR LENGTH

NOMINAL OPENING			D1	D2	L	tmin	Weight
mm	A/F Inch	CATALOG No.	mm	mm	mm	mm	gr
	15/16"	DH-1215	40	44	46	13.0	340
	1"	DH-1216	41	44	46	13.0	340
27	1-1/16"	DH-1217M27	41	44	48	13.0	340
	1-1/8"	DH-1218	44	44	52	16.5	380
30	1-3/16"	DH-1219M30	44	44	52	16.5	380
	1-1/4"	DH-1220	49	44	52	17.0	420
	1-5/16"	DH-1221	49	44	55	19.0	430
33		DH-12M33	49	44	55	17.0	430
34		DH-12M34	52	44	55	19.0	460
35	1-3/8"	DH-1222M35	52	44	55	19.0	460
36		DH-12M36	52	44	55	19.0	460
	1-7/16"	DH-1223	52	44	56	19.0	460
37		DH-12M37	54	44	56	19.0	490
38	1-1/2"	DH-1224M38	54	44	59	22.0	490
39		DH-12M39	57	44	59	22.0	520
	1-9/16"	DH-1225	57	44	59	22.0	520
40		DH-12M40	57	44	59	22.0	520
41	1-5/8"	DH-1226M41	57	44	59	22.0	520
42		DH-12M42	60	44	59	22.0	520
43	1-11/16"	DH-1227M43	63	44	64	25.0	600
44		DH-12M44	63	44	64	25.0	600
	1-3/4"	DH-1228	63	44	64	25.0	600
45		DH-12M45	63	44	64	25.0	600
46	1-13/16"	DH-1229M46	67	44	64	25.0	850
47		DH-12M47	67	54	64	25.0	850
	1-7/8"	DH-1230	67	54	67	27.0	910
48		DH-12M48	67	54	67	27.0	910
49	1-15/16"	DH-1231M49	70	54	67	27.0	950
50		DH-12M50	70	54	67	27.0	950
51	2"	DH-1232M51	73	54	67	27.0	1040
52		DH-12M52	73	54	70	27.0	1040
	2-1/16"	DH-1233	73	54	71	30.0	1040
54	2-1/8"	DH-1234M54	73	54	71	30.0	1040
55		DH-12M55	78	54	71	30.0	1200
	2-3/16"	DH-1235	78	54	74	32.0	1200
56		DH-12M56	78	54	74	32.0	1200
57	2-1/4"	DH-1236M57	82	54	75	33.0	1320
58		DH-12M58	82	54	75	33.0	1320
59	2-5/16"	DH-1237M59	82	54	75	33.0	1320
60		DH-12M60	82	54	75	33.0	1320
	2-3/8"	DH-1238	82	54	75	35.0	1320
61		DH-12M61	86	54	75	35.0	1430

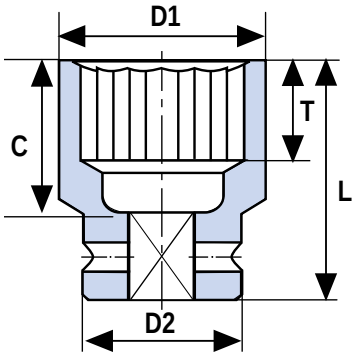

3/4" SQUARE DRIVE

ACCESSORIES

ADAPTERS

PART#	FEMALE	MALE	L
A1208	3/4	1/2	2.165
A1210	3/4	5/8	2.244
A1216	3/4	1	2.322

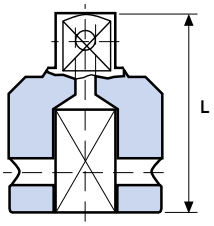

DOUBLE ENDED FEMALE ADAPTERS

PART#	D1	D2	L
AN1208	3/4	1/2	1.929
AN1210	3/4	5/8	1.968
AN1212	3/4	3/4	1.929
AN1612	3/4	1	2.480

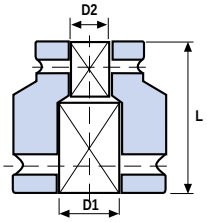

DOUBLE ENDED MALE ADAPTERS

PART#	D1	L
Z1202	1	2
Z1203	1	3
Z1204	1	4
Z1205	1	5
Z1207	1	7
Z1210	1	10
Z1213	1	13
Z1215	1	15
Z1216	1	16

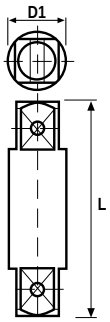

UNIVERSAL JOINT

SIZE	PART#
3/4	U1212

EXTENSIONS

PART#	L
E1203	3
E1204	4
E1205	5
E1207	7
E1213	13

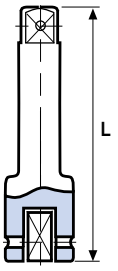

RETAINING PINS AND RINGS

SQUARE DRIVE	THROUGH HEX SIZE	PIN #	RING#	d	L	D
3/4	1-3/16 - 46mm	P1244	R1244	.156	1.365	1.404
5/8	Above 1-3/16	P1254	R1254	.156	1.750	1.794

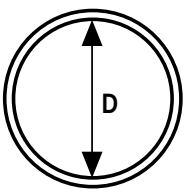

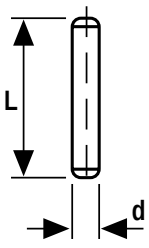

1” SQUARE DRIVE

SIX POINT IMPACT SOCKETS

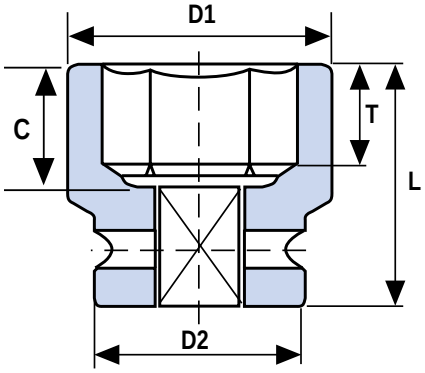

We maintain “in stock” one of the broadest ranges of 1” drive sockets available to industry. OZAT 1” drive sizes are equally well suited for construction, maintenance, and heavy assembly applications, as well as for precision bolting with hydraulic bolting equipment.

STANDARD FRACTIONAL SIZES

SIZE	PART#	D1	D2	L	T	C
3/4	Z-1612	1.417	2.126	2.145	0.374	1.040
13/16	Z 1613	1.496	2.126	2.145	0.433	1.040
7/8	Z-1614	1.575	2.126	2.145	0.551	1.040
15/16	Z-1615	1.614	2.126	2.145	0.551	1.040
1	Z-1616	1.693	2.126	2.145	0.551	1.119
1-1/16	Z-1617	1.811	2.126	2.145	0.551	1.119
1-1/8	Z-1618	1.890	2.126	2.223	0.650	1.119
1-3/16	Z-1619	1.969	2.126	2.223	0.650	1.119
1-1/4	Z-1620	2.008	2.126	2.223	0.669	1.119
1-5/16	Z-1621	2.126	2.126	2.340	0.748	1.198
1-3/8	Z-1622	2.126	2.126	2.340	0.748	1.198
1-7/16	Z-1623	2.126	2.126	2.340	0.748	1.198
1-1/2	Z-1624	2.362	2.126	2.496	0.866	1.316
1-9/16	Z-1625	2.362	2.126	2.496	0.866	1.316
1-5/8	Z-1626	2.480	2.126	2.496	0.866	1.316
1-11/16	Z-1627	2.638	2.126	2.691	0.984	1.513
1-3/4	Z-1628	2.756	2.126	2.691	1.004	1.592
1-13/16	Z-1629	2.756	2.126	2.691	1.004	1.592
1-7/8	Z-1630	2.756	2.126	2.808	1.062	1.631
1-15/16	Z-1631	2.874	2.126	2.808	1.062	1.631
2	Z-1632	2.874	2.126	2.808	1.062	1.631
2-1/16	Z-1633	3.071	2.126	2.964	1.181	1.828
2-1/8	Z-1634	3.228	2.126	2.964	1.181	1.828
2-3/16	Z-1635	3.228	2.126	3.120	1.259	1.946
2-1/4	Z-1636	3.228	2.126	3.120	1.299	1.946
2-5/16	Z-1637	3.386	2.126	3.198	1.299	2.025
2-3/8	Z-1638	3.386	2.126	3.315	1.378	2.418
2-7/16	Z-1639	3.622	2.126	3.315	1.378	2.418
2-1/2	Z-1640	3.622	2.126	3.315	1.378	2.418
2-9/16	Z-1641	3.622	2.126	3.315	1.378	2.458
2-5/8	Z-1642	3.622	2.126	3.432	1.496	2.536
2-11/16	Z-1643	3.780	2.126	3.432	1.496	2.576
2-3/4	Z-1644	3.780	3.386	3.432	1.496	2.615
2-13/16	Z-1645	3.937	3.386	3.588	1.575	2.615
2-7/8	Z-1646	3.937	3.386	3.588	1.614	2.615
2-15/16	Z-1647	3.937	3.386	3.588	1.614	2.615
3	Z-1648	4.134	3.386	3.783	1.732	2.655
3-1/16	Z-1649	4.134	3.386	3.783	1.732	2.655
3-1/8	Z-1650	4.134	3.386	3.783	1.732	2.655
3-3/16	Z-1651	4.291	3.386	3.900	1.850	2.812
3-1/4	Z-1652	4.291	3.386	3.900	1.850	2.812
3-5/16	Z-1653	4.291	3.386	3.900	1.850	2.812
3-3/8	Z-1654	4.291	3.386	4.056	1.929	2.930
3-7/16	Z-1655	4.764	3.386	4.056	1.929	2.930
3-1/2	Z-1656	4.764	3.386	4.056	1.929	2.930
3-9/16	Z-1657	5.000	3.386	4.056	1.890	2.930
3-5/8	Z-1658	5.118	3.386	4.056	1.929	2.930
3-11/16	Z-1659	5.118	3.386	4.056	1.929	2.930
3-3/4	Z-1660	5.315	3.386	4.134	1.929	3.245
3-13/16	Z-1661	5.315	3.386	4.368	2.125	3.245
3-7/8	Z-1662	5.315	3.386	4.368	2.125	3.245
3-15/16	Z-1663	5.315	3.386	4.368	2.125	3.245
4	Z-1664	5.512	5	4.368	2.125	3.245
4-1/16	Z-1665	4.512	5	4.368	2125	3 245
4-1/8	Z-1666	5.709	5	4.368	2125	3.245
4-3/16	Z-1667	5.709	5	4.758	2.441	3.245
4-1/4	Z-1668	5.709	5	4.758	2.441	3.599
4-5/16	Z-1669	5.906	5	4.758	2.441	3.599
4-3/8	Z-1670	5.906	5	4.758	2.441	3.599
4-7/16	Z-1671	6.102	5	4.758	2.441	3.599
4-1/2	Z-1672	6.102	5	4.758	2.441	3.599

1” SQUARE DRIVE

SIX POINT IMPACT SOCKETS

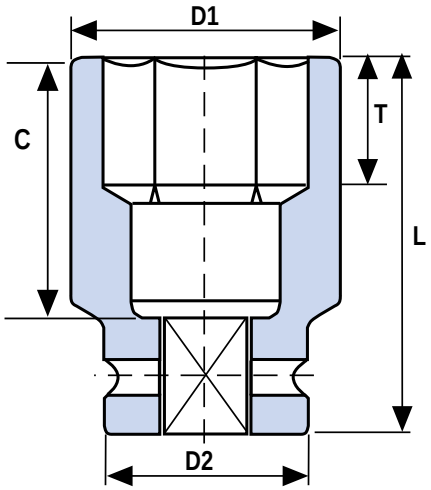

DEEP FRACTIONAL SIZES

SIZE	PART#	D1	D2	L	T	C
3/4	Z-1612L	1.417	2.126	3.900	0.374	2.812
13/16	Z-1613L	1.496	2.126	3.900	0.433	2.812
7/8	Z-1614L	1.575	2.126	3.900	0.551	2.812
15/16	Z-1615L	1.614	2.126	3.900	0.551	2.812
1	Z-1616L	1.693	2.126	3.900	0.551	2.812
1-1/16	Z-1617L	1.811	2.126	3.900	0.551	2.812
1-1/8	Z-1618L	1.890	2.126	3.900	0.650	2.812
1-3/16	Z-1619L	1.969	2.126	3.900	0.650	2.812
1-1/4	Z-1620L	2.008	2.126	3.900	0.669	2.812
1-5/16	Z-1621L	2.126	2.126	3.900	0.748	2.812
1-3/8	Z-1622L	2.126	2.126	3.900	0.748	2.812
1-7/16	Z-1623L	2.126	2.126	3.900	0.748	2.812
1-1/2	Z-1624L	2.362	2.126	3.900	0.866	2.812
1 -9/16	Z-1625L	2.362	2.126	3.900	0.866	2.812
1-5/8	Z-1626L	2.480	2.126	3.900	0.866	2.812
1-11/16	Z-1627L	2.638	2.126	3.900	0.984	2.812
1-3/4	Z-1628L	2.756	2.126	3.900	1.004	2.812
1-13/16	Z-1629L	2.756	2.126	3.900	1.004	2.812
1-7/8	Z-1630L	2.756	2.126	3.900	1.062	2.812
1-15/16	Z-1631L	2.874	2.126	3.900	1.062	2.812
2	Z-1632L	2.874	2.126	3.900	1.062	2.812
2-1/16	Z-1633L	3.071	2.126	3.900	1.181	2.969
2-1/8	Z-1634L	3.228	2.126	4.056	1.181	2.969
2-3/16	Z-1635L	3.228	2.126	4.095	1.259	3.088
2-1/4	Z-1636L	3.228	2.126	4.095	1.299	3.088
2-5/16	Z-1637L	3.386	2.126	4.368	1.299	3.166
2-3/8	Z-1638L	3.386	2.126	4.368	1.378	3.560
2-7/16	Z-1639L	3.622	2.126	4.602	1.378	3.560
2-1/2	Z-1640L	3.622	2.126	4.602	1.378	3.560
2-9/16	Z-1641L	3.622	2.126	4.602	1.378	3.599
2-5/8	Z-1642L	3.622	2.126	4.602	1.496	3.678
2-11/16	Z-1643L	3.780	2.126	4.836	1.496	3.718
2-3/4	Z-1644L	3.780	3.386	4.836	1.496	3.757
2-13/16	Z-1645L	3.937	3.386	4.836	1.575	3.757
2-7/8	Z-1646L	3.937	3.386	4.836	1.614	3.757
2-15/16	Z-1647L	3.937	3.386	4.836	1.614	3.757
3	Z-1648L	4.134	3.386	5.07	1.732	3.796
3-1/16	Z-1649L	4.134	3.386	5.07	1.732	3.796
3-1/8	Z-1650L	4.134	3.386	5.148	1.732	3.796
3-3/16	Z-1651L	4.291	3.386	5.148	1.850	3.954
3-1/4	Z-1652L	4.291	3.386	5.148	1.850	3.954
3-5/16	Z-1653L	4.291	3.386	5.148	1.850	3.954
3-3/8	Z-1654L	4.291	3.386	5.460	1.929	4.072
3-7/16	Z-1655L	4.764	3.386	5.460	1.929	4.072
3-1/2	Z-1656L	4.764	3.386	5.460	1.929	4.072
3-9/16	Z-1657L	5.000	3.386	5.460	1.890	4.072
3-5/8	Z-1658L	5.118	3.386	5.460	1.929	4.072
3-11/16	Z-1659L	5.118	3.386	5.460	1.929	4.072
3-3/4	Z-1660L	5.315	3.386	5.460	1.929	4.387
3-13/16	Z-1661L	5.315	3.386	5.577	2.125	4.387
3-7/8	Z-1662L	5.315	3.386	5.577	2.125	4.387
3-15/16	Z-1663L	5.315	3.386	5.577	2.125	4.387
4	Z-1664L	5.512	5.000	5.577	2.125	4.387
4-1/16	Z-1665L	4.512	5.000	5.577	2.125	4.387
4-1/8	Z-1666L	5.709	5.000	5.577	2.125	4.387
4-3/16	Z-1667L	5.709	5.000	5.811	2.441	4.387
4-1/4	Z-1668L	5.709	5.000	5.811	2.441	4.741
4-5/16	Z-1669L	5.906	5.000	5.811	2.441	4.741
4-3/8	Z-1670L	5.906	5.000	5.811	2.441	4.741
4-7/16	Z-1671L	6.102	5.000	5.811	2.441	4.741
4-1/2	Z-1672L	6.102	5.000	5.811	2.441	4.741

1” SQUARE DRIVE

SIX POINT IMPACT SOCKETS

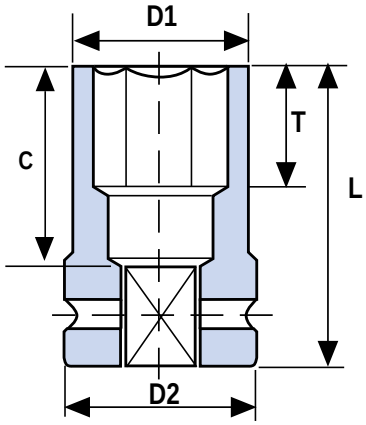

DEEP FRACTIONAL THINWALL

SIZE	PART#	D1	D2	L	T	C
7/8	Z-1614LT	1.496	2.126	3.937	.500	2.812
15/16	Z-1615LT	1.496	2.126	3.937	.500	2.812
1	Z-1616LT	1.614	2.126	3.937	.500	2.812
1-1/16	Z-1617LT	1.732	2.126	3.937	.500	2.812
1-1/8	Z-1618LT	1.732	2.126	3.937	.500	2.812
1-3/16	Z-1619LT	1.929	2.126	3.937	1.299	2.812
1-1/4	Z-1620LT	1.929	2.126	3.937	1.339	2.812
1-5/16	Z-1621LT	2.047	2.126	3.937	1.496	2.812
1-3/8	Z-1622LT	2.047	2.126	3.937	1.496	2.812
1-7/16	Z-1623LT	2.126	2.126	3.937	1.496	2.812
1-1/2	Z-1624LT	2.224	2.126	3.937	1.732	2.812
1-9/16	Z-1625LT	2.244	2.126	3.937	1.732	2.812
1-5/8	Z-1626LT	2.362	2.126	3.937	1.732	2.812
1-11/16	Z-1627LT	2.480	2.126	3.937	1.968	2.812
1-3/4	Z-1628LT	2.638	2.126	3.937	2.008	2.812
1-13/16	Z-1629LT	2.638	2.126	3.937	2.008	2.812

DEEP METRIC THINWALL

SIZE	PART#	D1	D2	L	T	C
22	Z-16M22LT	38	54	100	20	71
23	Z-16M23LT	38	54	100	24	71
24	Z-16M24LT	38	54	100	24	71
25	Z-16M25LT	41	54	100	26	71
26	Z-16M26LT	44	54	100	26	71
27	Z-16M27LT	44	54	100	26	71
28	Z-16M28LT	44	54	100	28	71
29	Z-16M29LT	44	54	100	28	71
30	Z-16M30LT	49	54	100	33	71
31	Z-16M31LT	49	54	100	33	71
32	Z-16M32LT	49	54	100	33	71
33	Z-16M33LT	52	54	100	34	71
34	Z-16M34LT	52	54	100	34	71
35	Z-16M35LT	52	54	100	38	71
36	Z-16M36LT	54	54	100	38	71
37	Z-16M37LT	54	54	100	38	71
38	Z-16M38LT	54	54	100	43	71
39	Z-16M39LT	54	54	100	43	71
40	Z-16M40LT	54	54	100	43	71
41	Z-16M41LT	54	54	100	44	71
42	Z-16M42LT	54	54	100	44	71
43	Z-16M43LT	54	54	100	50	71
44	Z-16M44LT	54	54	100	50	71
45	Z-16M45LT	54	54	100	51	71
46	Z-16M46LT	54	54	100	51	71

1" SQUARE DRIVE

SIX POINT IMPACT SOCKETS

STANDARD METRIC SIZES

SIZE	PART#	D1	D2	L	T	C
19	Z-16M19	36	54	55	9.5	26
20	Z-16M20	37	54	55	10	26
21	Z-16M21	38	54	55	10	26
22	Z-16M22	40	54	55	10	26
23	Z-16M23	41	54	55	12	26
24	Z-16M24	42	54	55	12	26
25	Z-16M25	43	54	55	13	26
26	Z-16M26	45	54	55	13	26
27	Z-16M27	46	54	55	13	26
28	Z-16M28	47	54	55	14	26
29	Z-16M29	48	54	57	14	28
30	Z-16M30	50	54	57	16.5	28
31	Z-16M31	51	54	57	16.5	28
32	Z-16M32	51	54	57	16.5	28
33	Z-16M33	54	54	57	17	28
34	Z-16M34	54	54	60	19	31
35	Z-16M35	54	54	60	19	31
36	Z-16M36	54	54	60	19	31
37	Z-16M37	57	54	60	19	31
38	Z-16M38	60	54	64	22	35
39	Z-16M39	60	54	64	21.5	35
40	Z-16M40	63	54	64	21.5	35
41	Z-16M41	63	54	64	22	35
42	Z-16M42	63	54	64	21.5	35
43	Z-16M43	67	54	69	25	40
44	Z-16M44	67	54	69	21.5	40
45	Z-16M45	70	54	69	21.5	40
46	Z-16M46	70	54	69	25.5	40
47	Z-16M47	70	54	69	23.5	40
48	Z-16M48	73	54	72	23.5	43
49	Z-16M49	73	54	72	27	43
50	Z-16M50	73	54	72	23.5	43
51	Z-16M51	73	54	72	27	43
52	Z-16M52	78	54	72	27	43
54	Z-16M54	82	54	76	30	47
55	Z-16M55	82	54	76	27	47
56	Z-16M56	82	54	75	28	46
57	Z-16M57	82	54	80	33	51
58	Z-16M58	86	54	75	28	46
59	Z-16M59	86	54	82	33	53
60	Z-16M60	86	54	75	28	46
61	Z-16M61	88	54	85	28	56
62	Z-16M62	92	54	85	35	56
65	Z-16M65	92	54	85	35	56
67	Z-16M67	92	54	88	38	62
70	Z-16M70	96	54	88	38	79
73	Z-16M73	100	86	92	41	83
75	Z-16M75	100	86	92	41	83
76	Z-16M76	105	86	97	44	68
77	Z-16M77	105	86	97	44	68
80	Z-16M80	105	86	97	37	59
85	Z-16M85	115	86	100	40	63
86	Z-16M86	115	86	104	49	75
90	Z-16M90	127	86	104	43	68
95	Z-16M95	135	86	106	49	77
100	Z-16M100	135	86	112	54	83
105	Z-16M105	145	127	112	54	83
110	Z-16M110	150	127	122	62	93
115	Z-16M115	155	127	122	57	91

DEEP METRIC SIZES

SIZE	PART#	D1	D2	L	T	C
19	Z-16M19L	36	54	100	9.5	71
20	Z-16M20L	37	54	100	10	71
21	Z-16M21L	38	54	100	10	71
22	Z-16M22L	40	54	100	10	71
23	Z-16M23L	41	54	100	12	71
24	Z-16M24L	42	54	100	12	71
25	Z-16M25L	43	54	100	13	71
26	Z-16M26L	45	54	100	13	71
27	Z-16M27L	46	54	100	13	71
28	Z-16M28L	47	54	100	14	71
29	Z-16M29L	48	54	100	14	71
30	Z-16M30L	50	54	100	16.5	71
31	Z-16M31L	51	54	100	16.5	71
32	Z-16M32L	51	54	100	16.5	71
33	Z-16M33L	54	54	100	17	71
34	Z-16M34L	54	54	100	19	71
35	Z-16M35L	54	54	100	19	71
36	Z-16M36L	54	54	100	19	71
37	Z-16M37L	57	54	100	19	71
38	Z-16M38L	60	54	100	22	71
39	Z-16M39L	60	54	100	21.5	71
40	Z-16M40L	63	54	100	21.5	71
41	Z-16M41L	63	54	100	22	71
42	Z-16M42L	63	54	100	21.5	71
43	Z-16M43L	67	54	100	25	71
44	Z-16M44L	67	54	100	21.5	71
45	Z-16M45L	70	54	100	21.5	71
46	Z-16M46L	70	54	100	25.5	71
47	Z-16M47L	70	54	100	23.5	71
48	Z-16M48L	73	54	100	23.5	71
49	Z-16M49L	73	54	100	27	71
50	Z-16M50L	73	54	100	23.5	71
51	Z-16M51L	73	54	100	27	71
52	Z-16M52L	78	54	100	27	71
54	Z-16M54L	82	54	104	30	75
55	Z-16M55L	82	54	104	27	75
56	Z-16M56L	82	54	105	28	76
57	Z-16M57L	82	54	105	33	76
58	Z-16M58L	86	54	105	28	76
59	Z-16M59L	86	54	112	33	83
60	Z-16M60L	86	54	105	28	83
61	Z-16M61L	88	54	112	28	83
62	Z-16M62L	92	54	118	35	89
65	Z-16M65L	92:	54	118	35	89
67	Z-16M67L	92	54	118	38	89
70	Z-16M70L	96	54	124	38	95
73	Z-16M73L	100	86	124	41	95
75	Z-16M75L	100	86	124	41	95
76	Z-16M76L	105	86	130	44	101
77	Z-16M77L	105	86	130	44	101
80	Z-16M80L	105	86	132	37	103
85	Z-16M85L	115	86	132	40	103
86	Z-16M86L	115	86	140	49	111
90	Z-16M90L	127	86	140	43	111
95	Z-16M95L	135	86	140	49	111
100	Z-16M100L	135	86	143	54	114
105	Z-16M105L	145	127	143	54	114
110	Z-16M110L	150	127	149	62	120
115	Z-16M115L	155	127	149	57	120

1” SQUARE DRIVE

HEX DRIVER SOCKETS

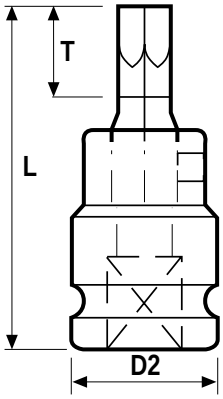

FRACTIONAL SIZES

SIZE	PART#	D2	L	T
1/2	Z-1608H	2.125	2.91	1.16
9/16	Z-1609H	2.125	2.91	1.16
5/8	Z-1610H	2.125	2.91	1.16
3/4	Z-1612H	2.125	2.91	1.16
13/16	Z-1613H	2.125	3.07	1.32
7/8	Z-1614H	2.125	3.07	1.32
1	Z-1616H	2.125	3.07	1.32
1-1/16	Z-1617H	2.125	3.23	1.48
1-1/8	Z-1618H	2.125	3.23	1.48
1-3/16	Z-1619H	2.125	3.23	1.48
1-1/4	Z-1620H	2.125	3.43	1.68

Note: 1 Piece Construction

METRIC SIZES

SIZE	PART#	D2	L	T
10	Z-16M10H	2.125	2.91	1.16
12	Z-16M12H	2.125	2.91	1.16
14	Z-16M14H	2.125	2.91	1.16
17	Z-16M17H	2.125	2.91	1.16
19	Z-16M19H	2.125	2.91	1.16
22	Z-16M22H	2.125	3.07	1.32
24	Z-16M24H	2.125	3.07	1.32
27	Z-16M27H	2.125	3.23	1.48
30	Z-16M30H	2.125	3.23	1.48
32	Z-16M32H	2.125	3.43	1.68

Note: 1 Piece Construction

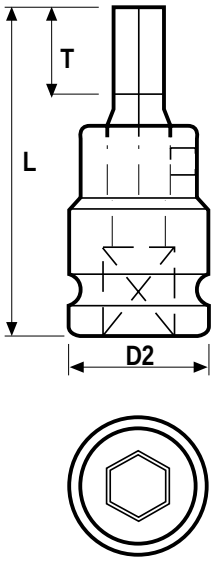

2 PART INHEX

NOMINAL OPENING			D2	L	T	Weight
mm	A/F Inch	Part #	mm	mm	mm	gr
	1/2”	Z-1608V	54	74	19	800
	9/16”	Z-1609V	54	74	21	800
	5/8”	Z-1610V	54	74	24	800
	3/4”	Z-1612V	54	74	26	800
	13/16”	Z-1613V	54	89	26	900
	7/8”	Z-1614V	54	89	26	900
	1“	Z-1616V	54	109	30	1000
	1-1/6”	Z-1617V	54	111	32	1000
	1-1/8”	Z-1618V	54	111	32	1000
	1-3/16”	Z-1619V	54	115	36	1000
	1-1/4”	Z-1620V	54	117	38	1000
10		Z-16M10V	54	74	16	800
12		Z-16M12V	54	74	18	800
14		Z-16M14V	54	74	21	800
17		Z-16M17V	54	74	26	800
19		Z-16M19V	54	89	26	900
22		Z-16M22V	54	89	26	900
24		Z-16M24V	54	89	26	900
27		Z-16M27V	54	111	32	1000
30		Z-16M30V	54	115	36	1000
32		Z-16M32V	54	117	38	1000

Note: 2 Piece Construction

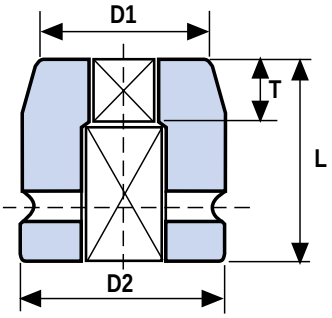

BUDD WHEEL SOCKETS

SIZE	PART#	D1	D2	L	T
17	Z-16M17B	40	54	55	9
21	Z-16M21B	47	54	55	10
13/16	Z-1613B	1.85	2.125	2.145	0.472
15/16	Z-1615B	2.07	2.125	2.340	0 512
13/16	Z-1613BL	1.85	2.125	3.900	0.472
15/16	Z-1615BL	2.07	2.125	3.900	0.512
13/16 X 1-1/2	Z-1624BS	2.24	2.125	3.900	0.571

1-1/2 Deep Z-1624 M38 LR with poly protective ring

1” SQUARE DRIVE

12 POINT IMPACT SOCKETS

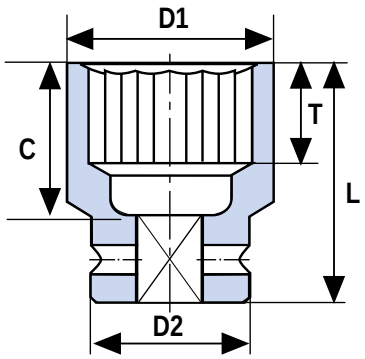

12 POINT IMPACT SOCKETS

NOMINAL OPENING			D1	D2	L	tmin	Weight
mm	A/F Inch	CATALOG No.	mm	mm	mm	mm	gr
	15/16”	DH-1615	41	54	55	13.0	600
	1”	DH-1616	43	54	55	13.0	600
27	1-1/16”	DH-1617M27	46	54	55	13.0	600
	1-1/8”	DH-1618	48	54	57	16.5	630
30	1-3/16”	DH-1619M30	50	54	57	16.5	630
	1-1/4”	DH-1620	51	54	57	17.0	630
	1-5/16”	DH-1621	54	54	60	19.0	650
35	1-3/8”	DH-1622M35	54	54	60	19.0	650
	1-7/16”	DH-1623	54	54	60	19.0	650
38	1-1/2”	DH-1624M38	60	54	64	22.0	760
	1-9/16”	DH-1625	60	54	64	22.0	760
41	1-5/8”	DH-1626M41	63	54	64	22.0	800
43	1-11/16”	DH-1627M43	67	54	69	25.0	950
	1-3/4”	DH-1628	70	54	69	25.5	1000

DOUBLE SQUARE IMPACT EIGHT POINT SOCKETS

STANDARD FRACTIONAL SIZES

SIZE	PART#	D1	D2	L	T	C
1-5/16	DS-1621	2.480	2.126	2.262	0.748	1.283
1-3/8	DS-1622	2.638	2.362	2.262	0.748	1.283
1-7/16	DS-1623	2.638	2.362	2.262	0.748	1.283
1-1/2	DS-1624	2.756	2.362	2.418	0 866	1 441
1-9/16	DS-1625	3.071	2.362	2.418	0.866	1 441
1-5/8	DS-1626	3.071	2.362	2.418	0 866	1 441
1-11/16	DS-1627	3.228	2.362	2.613	0.984	1.638
1-3/4	DS-1628	3.228	2.362	2.613	1.005	1.638
1-13/16	DS-1629	3.386	2.362	2.613	1.005	1.638
1-7/8	DS-1630	3.386	2.362	2.730	1 063	1 756
2	DS-1632	3.622	2.362	2.730	1 063	1 756
2-1/8	DS-1634	3.937	2.362	2.925	1.181	1.953
2-3/16	DS-1635	3.937	2.362	3.042	1.260	2.071
2-1/4	DS-1636	3.937	2.362	3.042	1.260	2.071
2-3/8	DS-1638	4.134	2.362	3.198	1.378	2.228
2-1/2	DS-1640	4.291	2.362	3.432	1.378	2.465

DEEP FRACTIONAL SIZES

SIZE	PART#	D1	D2	L	T	C
1-5/16	DS-1621L	2.480	2.126	3.159	0.748	2.189
1-3/8	DS-1622L	2.638	2.362	3.159	0.748	2.189
1-7/16	DS-1623L	2.638	2.362	3.159	0.748	2.189
1-1/2	DS-1624L	2.756	2.362	3.393	0.866	2.322
1-9/16	DS-1625L	3.071	2.362	3.432	0.866	2.322
1-5/8	DS-1626L	3.071	2.362	3.432	0.866	2.322
1-11/16	DS-1627L	3.228	2.362	3.432	0.984	2.322
1-3/4	DS-1628L	3.228	2.362	3.432	1.005	2.322
1-13/16	DS-1629L	3.386	2.362	3.432	1.005	2.322
1-7/8	DS-1630L	3.386	2.362	3.432	1.063	2.322
2	DS-1632L	3.622	2.362	3.432	1.063	2.322
2-1/8	DS-1634L	3.937	2.362	3.783	1.181	2.819
2-3/16	DS-1635L	3.937	2.362	3.783	1.260	2.819
2-1/4	DS-1636L	3.937	2.362	3.900	1.260	2.937
2-3/8	DS-1638L	4.134	2.362	3.900	1.378	2.937
2-1/2	DS-1640L	4.291	2.362	3.900	1.378	2.937

*Metric sizes 35, 38, 41, 43, 46, 51, 54, 57 are also available by special order. (POA)

Railroad Sockets are also available in square 4 point and rectangular 4 point tapered to fix Lag Screws by special order. (POA)

1” SQUARE DRIVE

ACCESSORIES

ADAPTERS

PART#	FEMALE	MALE	L
A1612	1	3/4	2.750
A1624	1	1-1/2	3.346
A1695	1	#5 Spline	4.330

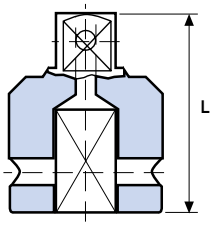

DOUBLE ENDED FEMALE ADAPTERS

PART#	D1	D2	L
AN1612	1	3/4	2.48
AN1616	1	1	2.32
AN2416	1	1-1/2	3.27

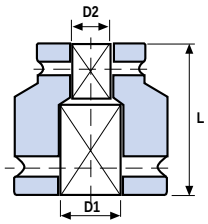

DOUBLE ENDED MALE ADAPTERS

PART#	D1	L
Z1603	1.3	3
Z1604	1.3	4
Z1605	1.3	5
Z1606	1.3	6
Z1607	1.3	7
Z1610	1.3	10
Z1613	1.3	13
Z1615	1.3	15
Z1616	1.3	16
Z1617	1.3	17

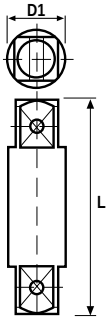

UNIVERSAL JOINT

SIZE	PART#	L Hole to Hole
1	U1616	4.250

EXTENSIONS

PART#	D1	L
E1604	2.125	4
E1605	2.125	5
E1607	2.125	7
E1610	2.125	10
E1613	2.125	13

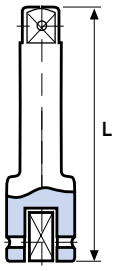

RETAINING PINS AND RINGS

SQUARE DRIVE	THROUGH HEX SIZE	PIN #	RING#	d	L	D
1	2-3/4 - 70mm	P1654	R1654	.195	1.750	1.750
1	3-5/16 - 100mm	P1686	R1686	.195	3.000	3.000
1	Above 3-5/16	P16127	R16127	.195	4.600	4.600

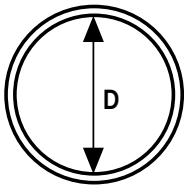

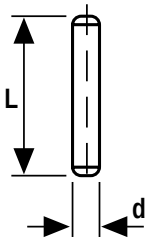

1½" SQUARE DRIVE

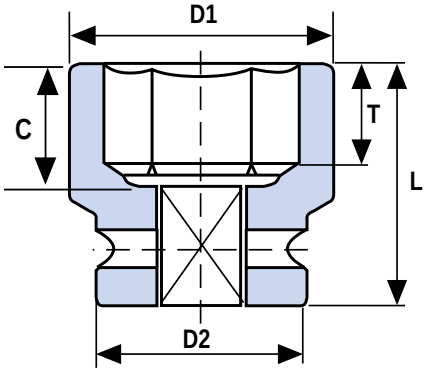

SIX POINT IMPACT SOCKETS

STANDARD FRACTIONAL SIZES

SIZE	PART#	D1	D2	L	T	C
1-5/16	Z-2421	2.402	3.386	2.925	0.748	1.328
1-3/8	Z-2422	2.480	3.386	2.925	0.748	1.328
1-7/16	Z-2423	2.520	3.386	3.120	0.748	1.525
1-1/2	Z-2424	2.520	3.386	3.120	0.866	1.525
1-9/16	Z-2425	2.677	3.386	3.120	0.866	1.525
1-5/8	Z-2426	2.795	3.386	3.120	0.866	1.525
1-11/16	Z-2427	2.874	3.386	3.120	0.984	1.525
1-3/4	Z-2428	2.953	3.386	3.120	1.004	1.525
1-13/16	Z-2429	2.953	3.386	3.120	1.004	1.525
1-7/8	Z-2430	3.150	3.386	3.198	1.036	1.603
1-15/16	Z-2431	3.150	3.386	3.198	1.063	1.603
2	Z-2432	3.150	3.386	3.198	1.063	1.603
2-1/16	Z-2433	3.386	3.386	3.471	1.181	1.840
2-1/8	Z-2434	3.386	3.386	3.471	1.181	1.840
2-3/16	Z-2435	3.386	3.386	3.588	1.260	1.958
2-1/4	Z-2436	3.386	3.386	3.588	1.280	1.958
2-5/16	Z-2437	3.622	3.386	3.588	1.300	1.958
2-3/8	Z-2438	3.622	3.386	3.744	1.378	2 115
2-7/16	Z-2439	3.780	3.386	3.744	1.378	2.115
2-1/2	Z-2440	3.937	3.386	3.744	1.378	2.115
2-9/16	Z-2441	3.937	3.386	3.744	1.378	2.115
2-5/8	Z-2442	3.937	3.386	3.939	1.496	2.312
2-11/16	Z-2443	4.134	3.386	3.939	1.496	2.312
2-3/4	Z-2444	4.134	3.386	3.939	1.496	2.312
2-13/16	Z-2445	4.291	3.386	4.095	1.575	2.509
2-7/8	Z-2446	4.291	3.386	4.095	1.614	2.509
2-15/16	Z-2447	4.291	3.386	4.095	1.614	2.509
3	Z-2448	4.528	3.386	4.290	1.732	2.706
3-1/16	Z-2449	4.528	3.386	4.290	1.732	2.706
3-1/8	Z-2450	4.528	3.386	4.290	1 770	2.706
3-3/16	Z-2451	4.764	3.386	4.524	1.850	3.099
3-1/4	Z-2452	4.764	3.386	4.524	1.850	3.099
3-5/16	Z-2453	4.764	3.386	4.524	1.850	3.099
3-3/8	Z-2454	5.000	3.386	4.524	1.930	3.099
3-7/16	Z-2455	5.000	3.386	4.602	1.930	3.099
3-1/2	Z-2456	5.118	3.386	4.602	1.930	3.099
3-9/16	Z-2457	5.118	3.386	4.602	1.930	3.099
3-5/8	Z-2458	5.315	5.000	4.602	1.930	3.099
3-11/16	Z-2459	5.315	5.000	4.602	1.930	3.099
3-3/4	Z-2460	5.315	5.000	4.602	1.930	3.296
3-13/16	Z-2461	5.512	5.000	4.875	2.125	3.296
3-7/8	Z-2462	5.512	5.000	4.875	2.125	3.296
3-15/16	Z-2463	5.512	5.000	4.875	2.125	3.296
4	Z-2464	5.709	5.000	4.875	2.125	3.296
4-1/16	Z-2465	5.709	5.000	4.875	2.125	3.296
4-1/8	Z-2466	5.906	5.000	4.875	2.126	3.296
4-3/16	Z-2467	5.906	5.000	5.343	2.440	3.296
4-1/4	Z-2468	5.906	5.000	5.343	2.440	3.690
4-5/16	Z-2469	6.102	5.000	5.343	2.440	3.690
4-3/8	Z-2470	6.102	5.000	5.343	2.440	3.690
4-7/16	Z-2471	6.102	5.000	5.343	2.440	3.690
4-1/2	Z-2472	6.299	5.000	5.343	2.440	3.690
4-5/8	Z-2474	6.496	5.000	5.577	2.640	4.084
4-3/4	Z-2476	6.693	5.000	5.655	2.640	4.084
4-7/8	Z-2478	6.693	5.000	5.655	2.640	4.084
5	Z-2480	7.087	5.000	5.850	2.830	4.281
5-1/8	Z-2482	7.087	5.000	6.162	2.990	4.674
5-3/16	Z-2483	7.087	5.000	6.162	2.990	4.674
5-1/4	Z-2484	7.480	5.000	6.162	2.980	4.574
5-3/8	Z-2486	7.480	5.000	6.162	2.990	4.674

1½" SQUARE DRIVE

SIX POINT IMPACT SOCKETS

DEEP FRACTIONAL SIZES

SIZE	PART#	D1	D2	L	T	C
1-5/16	Z-2421L	2.402	3.386	5.460	0.748	3.887
1-3/8	Z-2422L	2.480	3.386	5.460	0.748	3.887
1-7/16	Z-2423L	2.520	3.386	5.460	0.748	3.887
1-1/2	Z-2424L	2.520	3.386	5.460	0.866	3.887
1-9/16	Z-2425L	2.677	3.386	5.460	0.866	3.887
1-5/8	Z-2426L	2.795	3.386	5.460	0.866	3.887
1-11/16	Z-2427L	2.874	3.386	5.460	0.984	3.887
1-3/4	Z-2428L	2.953	3.386	5.460	1.004	3.887
1-13/16	Z-2429L	2.953	3.386	5.460	1.004	3.887
1-7/8	Z-2430L	3.150	3.386	5.460	1.036	3.887
1-15/16	Z-2431L	3.150	3.386	5.460	1.063	3.887
2	Z-2432L	3.150	3.386	5.460	1.063	3.887
2-1/16	Z-2433L	3.386	3.386	5.460	1.181	3.887
2-1/8	Z-2434L	3.386	3.386	5.460	1.181	3.887
2-3/16	Z-2435L	3.386	3.386	5.460	1.260	3.887
2-1/4	Z-2436L	3.386	3.386	5.460	1.280	3.887
2-5/16	Z-2437L	3.622	3.386	5.460	1.300	3.887
2-3/8	Z-2438L	3.622	3.386	5.460	1.378	3.887
2-7/16	Z-2439L	3.780	3.386	5.460	1.378	3.887
2-1/2	Z-2440L	3.937	3.386	5.460	1.378	3.887
2-9/16	Z-2441L	3.937	3.386	5.460	1.378	3.887
2-5/8	Z-2442L	3.937	3.386	5.460	1.496	3.887
2-11/16	Z-2443L	4.134	3.386	5.460	1.496	3.887
2-3/4	Z-2444L	4.134	3.386	5.460	1.496	3.887
2-13/16	Z-2445L	4.291	3.386	5.460	1.575	3.887
2-7/8	Z-2446L	4.291	3.386	5.460	1.614	3.887
2-15/16	Z-2447L	4.291	3.386	5.460	1.614	3.887
3	Z-2448L	4.528	3.386:	5.460	1.732	3.887
3-1/16	Z-2449L	4.528	3.386	5.460	1.732	3.887
3-1/8	Z-2450L	4.528	3.386	5.460	1.770	3.887
3-3/16	Z-2451L	4.764	3.386	5.460	1.850	3.887
3-1/4	Z-2452L	4.764	3.386	5.460	1.850	3.887
3-5/16	Z-2453L	4.764	3.386	5.460	1.850	3.887
3-3/8	Z-2454L	5.000	3.386	5.460	1.930	3.887
3-7/16	Z-2455L	5.000	3.386	5.460	1.930	3.887
3-1/2	Z-2456L	5.118	3.386	5.460	1.930	3.887
3-9/16	Z-2457L	5.118	3.386	5.460	1.930	3.887
3-5/8	Z-2458L	5.315	5.000	5.460	1.930	3.887
3-11/16	Z-2459L	5.315	5.000	5.460	1.930	4.281
3-3/4	Z-2460L	5.315	5.000	5.850	1.930	4.281
3-13/16	Z-2461L	5.512	5.000	5.850	2.125	4.281
3-7/8	Z-2462L	5.512	5.000	5.850	2.125	4.281
3-15/16	Z-2463L	5.512	5.000	5.850	2.125	4.281
4	Z-2464L	5.709	5.000	5.850	2.125	4.281
4-1/16	Z-2465L	5.709	5.000	5.850	2.125	4.281
4-1/8	Z-2466L	5.906	5.000	5.850	2.126	4.281
4-3/16	Z-2467L	5.906	5.000	5.850	2.440	4.281
4-1/4	Z-2468L	5.906	5.000	6.240	2.440	4.674
4-5/16	Z-2469L	6.102	5.000	6.240	2.440	4.674
4-3/8	Z-2470L	6.102	5.000	6.240	2.440	4.674
4-7/16	Z-2471L	6.102	5.000	6.240	2.440	4.674
4-1/2	Z-2472L	6.299	5.000	6.240	2.440	4.674
4-5/8	Z-2474L	6.496	5.000	6.630	2.640	5.068
4-3/4	Z-2476L	6.693	5.000	6.630	2.640	5.068
4-7/8	Z-2478L	6.693	5.000	6.630	2.640	5.068
5	Z-2480L	7.087	5.000	7.020	2.830	5.462
5-1/8	Z-2482L	7.087	5.000	7.215	2.990	5.658
5-3/16	Z-2483L	7.087	5.000	7.215	2.990	5.658
5-3/8	Z-2486L	7.480	5.000	7.215	2.990	5.658

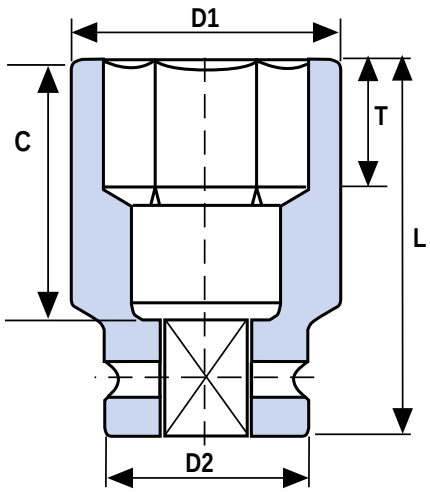

OZAT's exclusive electro chemical machining process, (ECM) produces a far stronger socket than one manufactured by conventional machining or broaching methods. The exceptional strength of the OZAT 1-1/2" drive sockets often makes them the preferred choice of hydraulic bolting specialists.

Speciality sockets for the precision bolting market are available.

1½" SQUARE DRIVE

SIX POINT IMPACT SOCKETS

STANDARD METRIC SIZES

SIZE	PART#	D1	D2	L	T	C
32	Z-24M32	60	86	75	16.5	34
33	Z-24M33	60	86	75	17	34
34	Z-24M34	60	86	75	17	34
35	Z-24M35	60	86	75	19	34
36	Z-24M36	64	86	80	19	39
37	Z-24M37	64	86	80	19	39
38	Z-24M38	64	86	80	22	39
39	Z-24M39	70	86	80	21.5	39
40	Z-24M40	70	86	80	21.5	39
41	Z-24M41	70	86	80	22	39
42	Z-24M42	70	86	80	21.5	39
43	Z-24M43	75	86	80	25	39
44	Z-24M44	75	86	80	21.5	39
45	Z-24M45	75	86	80	21.5	39
46	Z-24M46	75	86	80	25.5	39
47	Z-24M47	75	86	80	23.5	39
48	Z-24M48	80	86	82	23.5	41
49	Z-24M49	80	86	82	27	41
50	Z-24M50	80	86	82	23.5	41
51	Z-24M51	80	86	82	27	41
52	Z-24M52	80	86	82	27	41
54	Z-24M54	86	86	89	30	47
55	Z-24M55	86	86	89	27	47
56	Z-24M56	86	86	92	28	50
57	Z-24M57	86	86	92	32.5	50
58	Z-24M58	92	86	92	28	50
59	Z-24M59	92	86	92	33	50
60	Z-24M60	92	86	92	28	50
61	Z-24M61	96	86	96	28	54
62	Z-24M62	96	86	96	35	54
65	Z-24M65	100	86	96	35	54
67	Z-24M67	100	86	101	38	59
70	Z-24M70	105	86	101	38	59
73	Z-24M73	109	86	105	41	64
75	Z-24M75	109	86	105	41	64
76	Z-24M76	115	86	110	44	69
80	Z-24M80	115	86	110	37	69
85	Z-24M85	121	86	116	40	79
86	Z-24M86	127	86	116	49	79
90	Z-24M90	130	86	118	43	79
95	Z-24M95	135	127	118	49	84
100	Z-24M100	140	127	125	54	84
105	Z-24M105	150	127	125	54	84
110	Z-24M110	155	127	137	62	94
115	Z-24M115	160	127	137	57	94
120	Z-24M120	165	127	145	67	104
125	Z-24M125	170	127	145	67	104
130	Z-24M130	180	127	158	76	119

DEEP METRIC SIZES

SIZE	PART#	D1	D2	L	T	C
32	Z-24M32L	60	86	140	16.5	99
33	Z-24M33L	60	86	140	17	99
34	Z-24M34L	60	86	140	17	99
35	Z-24M35L	60	86	140	19	99
36	Z-24M36L	64	86	140	19	99
37	Z-24M37L	64	86	140	19	99
38	Z-24M38L	64	86	140	22	99
39	Z-24M39L	70	86	140	21.5	99
40	Z-24M40L	70	86	140	21.5	99
41	Z-24M41L	70	86	140	22	99
42	Z-24M42L	70	86	140	21.5	99
43	Z-24M43L	75	86	140	25	99
44	Z-24M44L	75	86	140	21.5	99
45	Z-24M45L	75	86	140	21.5	99
46	Z-24M46L	75	86	140	25.5	99
47	Z-24M47L	75	86	140	23.5	99
48	Z-24M48L	80	86	140	23.5	99
49	Z-24M49L	80	86	140	27	99
50	Z-24M50L	80	86	140	23.5	99
51	Z-24M51L	80	86	140	27	99
52	Z-24M52L	80	86	140	27	99
54	Z-24M54L	86	86	140	30	99
55	Z-24M55L	86	86	140	27	99
56	Z-24M56L	86	86	140	28	99
57	Z-24M57L	86	86	140	32.5	99
58	Z-24M58L	92	86	140	28	99
59	Z-24M59L	92	86	140	33	99
60	Z-24M60L	92	86	140	28	99
61	Z-24M61L	96	86	140	28	99
62	Z-24M62L	96	86	140	35	99
65	Z-24M65L	100	86	140	35	99
67	Z-24M67L	100	86	140	38	99
70	Z-24M70L	105	86	140	38	99
73	Z-24M73L	109	86	140	41	99
75	Z-24M75L	109	86	140	41	99
76	Z-24M76L	115	86	140	44	99
80	Z-24M80L	115	86	140	37	99
85	Z-24M85L	121	86	140	40	99
86	Z-24M86L	127	86	140	49	99
90	Z-24M90L	130	86	140	43	99
95	Z-24M95L	135	127	150	49	109
100	Z-24M100L	140	127	150	54	109
105	Z-24M105L	150	127	150	54	109
110	Z-24M110L	155	127	160	62	119
115	Z-24M115L	160	127	160	57	119
120	Z-24M120L	165	127	170	67	129
125	Z-24M125L	170	127	170	67	129
130	Z-24M130L	180	127	185	76	144

1½" SQUARE DRIVE

12 POINT IMPACT SOCKETS

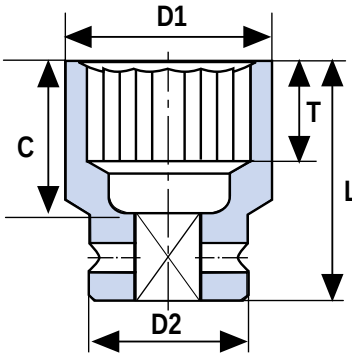

12 POINT IMPACT SOCKETS

NOMINAL OPENING			D1	D2	L	tmin	Weight
mm	A/F Inch	CATALOG No.	mm	mm	mm	mm	gr
	1-5/16	DH-2421	60	86	75	19	1800
35	1-3/8	DH-2422M35	60	86	75	19	1800
	1-7/16	DH-2423	64	86	80	19	2200
38	1-1/2	DH-2424M38	64	86	80	22	2200
	1-9/16	DH-2425	70	86	80	22	2200
41	1-5/8	DH-2426M41	70	86	80	22	2200
43	1-11/16	DH-2427M43	75	86	80	25	2200
	1-3/4	DH-2428	75	86	80	25.5	2200
46	1-13/16	DH-2429M46	75	86	80	25.5	2200
	1-7/8	DH-2430	80	86	82	27	2300
49	1-15/16	DH-2431M49	80	86	82	27	2300
51	2	DH-2432M51	80	86	82	27	2300
	2-1/16	DH-2433	86	86	89	30	2500
54	2-1/8	DH-2434M54	86	86	89	30	2500
55		DH-24M55	86	86	89	30	2500
	2-3/16	DH-2435	86	86	92	32	2500
57	2-1/4	DH-2436M57	86	86	92	32.5	2500
59	2-5/16	DH-2437M59	92	86	92	33	280
	2-3/8	DH-2438	92	86	96	35	2800
62	2-7/16	DH-2439M62	96	86	96	35	3200
	2-1/2	DH-2440	100	86	96	35	3350
65	2-9/16	DH-2441M65	100	86	96	35	3350
67	2-5/8	DH-2442M67	100	86	101	38	3350
70	2-3/4	DH-2444M70	105	86	101	38	3600
73	2-7/8	DH-2446M73	105	86	101	44	3900
75	2-15/16	DH-2447M75	105	86	101	44	3900
	2-13/16	DH-2445	105	86	105	44	3900
76	3	DH-2448M76	115	86	110	44	4500
	3-1/8	DH-2450	115	86	110	44	4500

1½" SQUARE DRIVE

ACCESSORIES

AN2424 Hex 3 Z2410

SPECIAL HOPPER CAR GATE SOCKETS

PART#	FEMALE	MALE TAPER
HEX-3	1-1/2" sq.	3/4" sq. to 1-7/8" sq
HEX-12	2-1/2" sq.	3/4" sq. to 1-7/8" sq

ADAPTERS

PART#	FEMALE	MALE	L
A2416	1-1/2	1	3.75
A2440	1-1/2	2-1/2	3.50
A2495	1-1/2	#5 Spline	4.33

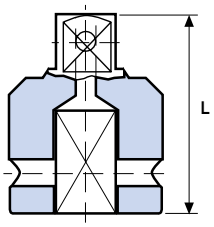

DOUBLE ENDED FEMALE ADAPTERS

PART#	D1	D2	L
AN2416	1-1/2	1	3.27
AN2424	1-1/2	1-1/2	3.35
AN4024	1-1/2	2-1/2	4.53

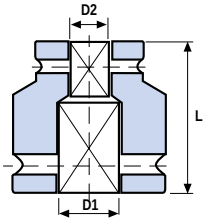

DOUBLE ENDED MALE ADAPTERS

PART#	D1	L
Z2404	1.93	4
Z2405	1.93	5
Z2410	1.93	10
Z2420	1.93	20

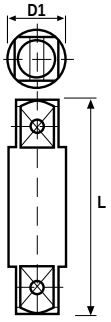

UNIVERSAL JOINT

SIZE	PART#
1-1/2	U2424

EXTENSIONS

PART#	L
E2406	6
E2412	12

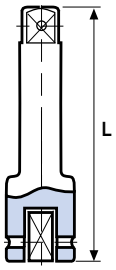

RETAINING PINS AND RINGS

SQUARE DRIVE	THROUGH HEX SIZE	PIN #	RING#	d	L	D
1-1/2	3-9/16 - 90mm	P2486	R2486	.234	2.925	2.925
1-1/2	Above 3-9/16	P24127	R24127	.234	4.525	4.525

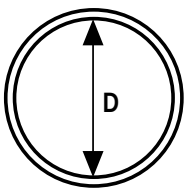

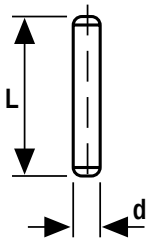

2½" SQUARE DRIVE

SIX POINT IMPACT SOCKETS

STANDARD FRACTIONAL SIZES

SIZE	PART#	D1	D2	L	T	C
1-5/8	Z-4026	4.094	5.000	4.485	0.846	2.349
1-11/16	Z-4027	4.094	5.000	4.485	0.984	2.349
1-3/4	Z-4028	4.094	5.000	4.485	1.000	2.349
1-13/16	Z-4029	4.094	5.000	4.485	1.000	2.349
1-7/8	Z-4030	4.094	5.000	4.485	1.062	2.349
1-15/16	Z-4031	4.094	5.000	4.485	1.062	2.349
2	Z-4032	4.094	5.000	4.485	1.062	2.349
2-1/16	Z-4033	4.094	5.000	4.485	1.181	2.349
2-1/8	Z-4034	4.094	5.000	4.485	1.181	2.349
2-3/16	Z-4035	4.094	5.000	4.485	1.260	2.349
2-1/4	Z-4036	4.094	5.000	4.485	1.280	2.349
2-5/16	Z-4037	4.094	5.000	4.485	1.299	2.349
2-3/8	Z-4038	4.094	5.000	4.485	1.378	2.349
2-7/16	Z-4039	4.094	5.000	4.485	1.378	2.349
2-1/2	Z-4040	4.094	5.000	4.485	1.378	2.349
2-9/16	Z-4041	4.094	5.000	4.485	1.378	2.349
2-5/8	Z-4042	4.094	5.000	4.485	1.496	2.349
2-11/16	Z-4043	4.094	5.000	4.485	1.496	2.349
2-3/4	Z-4044	4.094	5.000	4.485	1.496	2.349
2-13/16	Z-4045	4.094	5.000	4.870	1.575	2.349
2-7/8	Z-4046	4.094	5.000	4.870	1.614	2.349
2-15/16	Z-4047	4.094	5.000	4.870	1.614	2.349
3	Z-4048	4.094	5.000	4.870	1.732	2.349
3-1/16	Z-4049	4.094	5.000	4.870	1.732	2.349
3-1/8	Z-4050	4.094	5.000	4.870	1.732	2.349
3-3/16	Z-4051	5.000	5.000	5.070	1.850	2.743
3-1/4	Z-4052	5.000	5.000	5.070	1.850	2.743
3-5/16	Z-4053	5.000	5.000	5.070	1.850	2.743
3-3/8	Z-4054	5.000	5.000	5.070	1.930	2.743
3-7/16	Z-4055	5.315	5.000	5.140	1.930	2.822
3-1/2	Z-4056	5.315	5.000	5.140	1.930	2.822
3-9/16	Z-4057	5.315	5.000	5.140	1.930	2.822
3-5/8	Z-4058	5.315	5.000	5.140	1.930	2.822
3-11/16	Z-4059	5.315	5.000	5.140	1.930	2.822
3-3/4	Z-4060	5.512	5.000	5.140	1.930	2.822
3-13/16	Z-4061	5.709	5.000	5.500	2.125	3.137
3-7/8	Z-4062	5.709	5.000	5.500	2.125	3.137
3-15/16	Z-4063	5.709	5.000	5.500	2.125	3.137
4	Z-4064	5.906	5.000	5.500	2.125	3.137
4-1/16	Z-4065	5.906	5.000	5.500	2.125	3.137
4-1/8	Z-4066	6.102	5.000	5.500	2.125	3.137
4-3/16	Z-4067	6.102	5.000	5.850	2.440	3.491
4-1/4	Z-4068	6.102	5.000	5.850	2.440	3.491
4-5/16	Z-4069	6.299	5.000	5.850	2.440	3.49
4-3/8	Z-4070	6.299	5.000	5.850	2.440	3.491
4-7/16	Z-4071	6.496	5.000	5.850	2.440	3.49
4-1/2	Z-4072	6.496	5.000	5.850	2.440	3.491
4-5/8	Z-4074	6.693	5.000	6.160	2.640	3.806
4-3/4	Z-4076	6.693	5.000	6.160	2.640	3.806
4-7/8	Z-4078	6.693	5.000	6.160	2.640	3.806
5	Z-4080	7.087	5.000	6.435	2.830	4.121
5-1/8	Z-4082	7.087	5.000	6.430	2.990	4.436
5-3/16	Z-4083	7.087	5.000	6.780	2.909	4.436

Table continued next column

STANDARD FRACTIONAL SIZES

SIZE	PART#	D1	D2	L	T	C
5-1/4	Z-4084	7.480	5.000	6.780	2.99	4.436
5-3/8	Z-4086	7.480	5.000	6.780	2.99	4.436
5-1/2	Z-4088	7.480	5.000	6.860	3.11	4.790
5-5/8	Z-4090	7.874	5.906	7.090	3.27	4.790
5-3/4	Z-4092	7.874	5.906	7.090	3.27	4.790
5-7/8	Z-4094	8.268	5.906	7.410	3.46	5.105
6	Z-4096	8.268	5.906	7.410	3.46	5.105
6-1/8	Z-4098	8.268	5.906	7.410	3.46	5.105
6-1/4	Z-40100	8.661	5.906	7.560	3.58	5.263
6-3/8	Z-40102	8.661	5.906	7.560	3.58	5.263
6-1/2	Z-40104	9.055	6.890	7.830	3.70	5.735
6-5/8	Z-40106	9.055	6.890	7.830	3.70	5.735
6-3/4	Z-40108	9.055	6.8900	8.110	3.90	5.735
6-7/8	Z-40110	9.449	6.890	8.110	3.90	5.735
7	Z-40112	9.449	6.890	8.340	4.09	6.050
7-1/8	Z-40114	9.843	6.890	8.340	4.09	6.050
7-1/4	Z-40116	9.843	6.890	8.340	4.09	6.050
7-3/8	Z-40118	9.843	6.890	8.500	4.21	6.208
7-1/2	Z-40120	10.236	6.890	8.500	4.21	6.208
7-5/8	Z-40122	10.236	6.890	8.650	4.29	6.365
7-3/4	Z-40124	10.630	6.890	8.810	4.41	6.523
7-13/16	Z-40125	10.630	6.890	8.810	4.41	6.523
7-7/8	Z-40126	10.630	6.890	8.810	4.41	6.523
8	Z-40128	10.630	6.890	9.040	4.53	7.034
8-1/8	Z-40130	11.024	6.890	9.040	4.53	7.034
8-1/4	Z-40132	11.024	6.890	9.040	4.53	7.034
8-3/8	Z-40134	11.417	6.890	9.320	4.72	7.034
8-1/2	Z-40136	11.417	6.890	9.750	4.80	7.782
8-3/4	Z-40140	11.811	6.890	9.870	4.88	7.782
8-7/8	Z-40142	11.811	6.890	10.062	4.96	7.782
9	Z-40144	12.205	6.890	10.062	5.04	7.782
9-1/8	Z-40146	12.205	6.890	10.062	5.16	7.782
9-1/4	Z-40148	12.205	6.890	10.725	5.24	9.515

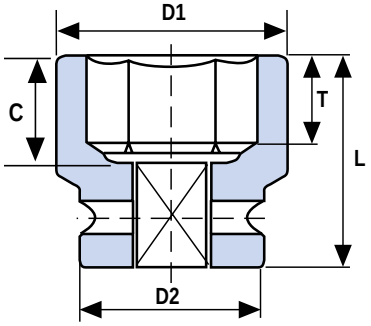

2½" SQUARE DRIVE

SIX POINT IMPACT SOCKETS

DEEP FRACTIONAL SIZES

SIZE	PART#	D1	D2	L	T	C
1-5/8	Z-4026L	4.094	5.000	7.480	0.846	5.184
1-11/16	Z-4027L	4.094	5.000	7.480	0.984	5.184
1-3/4	Z-4028L	4.094	5.000	7.480	1.000	5.184
1-13/16	Z-4029L	4.094	5.000	7.480	1.000	5.184
1-7/8	Z-4030L	4.094	5.000	7.480	1.062	5.184
1-15/16	Z-4031L	4.094	5.000	7.480	1.062	5.184
2	Z-4032L	4.094	5.000	7.480	1.062	5.184
2-1/16	Z-4033L	4.094	5.000	7.480	1.181	5.184
2-1/8	Z-4034L	4.094	5.000	7.480	1.181	5.184
2-3/16	Z-4035L	4.094	5.000	7.480	1.260	5.184
2-1/4	Z-4036L	4.094	5.000	7.480	1.280	5.184
2-5/16	Z-4037L	4.094	5.000	7.480	1.299	5.184
2-3/8	Z-4038L	4.094	5.000	7.480	1.378	5.184
2-7/16	Z-4039L	4.094	5.000	7.480	1.378	5.184
2-1/2	Z-4040L	4.094	5.000	7.480	1.378	5.184
2-9/16	Z-4041L	4.094	5.000	7.480	1.378	5.184
2-5/8	Z-4042L	4.094	5.000	7.480	1.496	5.184
2-11/16	Z-4043L	4.094	5.000	7.480	1.496	5.184
2-3/4	Z-4044L	4.094	5.000	7.480	1.496	5.184
2-13/16	Z-4045L	4.094	5.000	7.480	1.575	5.184
2-7/8	Z-4046L	4.094	5.000	7.480	1.614	5.184
2-15/16	Z-4047L	4.094	5.000	7.480	1.614	5.184
3	Z-4048L	4.094	5.000	7.480	1.732	5.184
3-1/16	Z-4049L	4.094	5.000	7.480	1.732	5.184
3-1/8	Z-4050L	4.094	5.000	7.480	1.732	5.184
3-3/16	Z-4051L	5.000	5.000	7.480	1.850	5.184
3-1/4	Z-4052L	5.000	5.000	7.480	1.850	5.184
3-5/16	Z-4053L	5.000	5.000	7.480	1.850	5.184
3-3/8	Z-4054L	5.000	5.000	7.480	1.930	5.184
3-7/16	Z-4055L	5.315	5.000	7.480	1.930	5.184
3-1/2	Z-4056L	5.315	5.000	7.480	1.930	5.184
3-9/16	Z-4057L	5.315	5.000	7.480	1.930	5.184
3-5/8	Z-4058L	5.315	5.000	7.480	1.930	5.184
3-11/16	Z-4059L	5.315	5.000	7.480	1.930	5.184
3-3/4	Z-4060L	5.512	5.000	7.480	1.930	5.184
3-13/16	Z-4061L	5.709	5.000	7.720	2.125	5.420
3-7/8	Z-4062L	5.709	5.000	7.720	2.125	5.420
3-15/16	Z-4063L	5.709	5.000	7.720	2.125	5.420
4	Z-4064L	5.906	5.000	7.720	2.125	5.420
4-1/16	Z-4065L	5.906	5.000	7.720	2.125	5 420
4-1/8	Z-4066L	6.102	5.000	7.720	2.125	5.420
4-3/16	Z-4067L	6.102	5.000	8.070	2.440	5.775
4-1/4	Z-4068L	6.102	5.000	8.070	2.440	5.775
4-5/16	Z-4069L	6.299	5.000	8.070	2.44	5.775
4-3/8	Z-4070L	6.299	5.000	8.070	2.44	5.775
4-7/16	Z-4071L	6.496	5.000	8.070	2.44	5.775
4-1/2	Z-4072L	6.496	5.000	8.070	2.44	5.775
4-5/8	Z-4074L	6.693	5 000	8.380	2.64	6.090
4-3/4	Z-4076L	6.693	5.000	8.380	2.64	6.090
4-7/8	Z-4078L	6.693	5.000	8.380	2.64	6.090
5	Z-4080L	7.087	5.000	8.700	2.83	6.405
5-1/8	Z-4082L	7.087	5.000	9.000	2.99	6.719
5-3/16	Z-4083L	7.087	5 000	9.000	2.99	6.719

Table continued next column

DEEP FRACTIONAL SIZES

SIZE	PART#	D1	D2	L	T	C
5-1/4	Z-4084L	7.480	5.000	9.000	2.99	6.719
5-3/8	Z-4086L	7.480	5 000	9.000	2.99	6.719
5-1/2	Z-4088L	7.480	5.000	9.120	3.110	7.074
5-5/8	Z-4090L	7.874	5.906	9.360	3.270	7.074
5-3/4	Z-4092L	7.874	5.906	9.360	3.270	7.074
5-7/8	Z-4094L	8.268	5.906	9.670	3.460	7.389
6	Z-4096L	8.268	5.906	9.670	3.460	7.389
6-1/8	Z-4098L	8.268	5.906	9.670	3.460	7.389
6-1/4	Z-40100L	8.661	5.906	9.820	3.580	7.546
6-3/8	Z-40102L	8.661	5.906	9.820	3.580	7.546
6-1/2	Z-40104L	9.055	6.890	10.140	3.7000	8.019
6-5/8	Z-40106L	9.055	6.890	10.140	3.700	8.019
6-3/4	Z-40108L	9.055	6.890	10.300	3.900	8.019
6-7/8	Z-40110L	9.449	6.890	10.300	3.900	8.019
7	Z-40112L	9.449	6.890	10.600	4.090	8.334
7-1/8	Z-40114L	9.843	6.890	10.600	4.090	8.334
7-1/4	Z-40116L	9.843	6.890	10.600	4.090	8.334
7-3/8	Z-40118L	9.843	6.890	10.760	4.210	8.491
7-1/2	Z-40120L	10.236	6.890	10.760	4.210	8.491
7-5/8	Z-40122L	10.236	6.890	10.920	4.290	8.649
7-3/4	Z-40124L	10.630	6.890	10.070	4.410	8.806
7-13/16	Z-40125L	10.630	6.890	10.070	4.410	8.806
7-7/8	Z-40126L	10.630	6.890	10.070	4.410	8.806
8	Z-40128L	10.630	6.890	11.310	4.530	9.318
8-1/8	Z-40130L	11.024	6.890	11.310	4.530	9.318
8-1/4	Z-40132L	11.024	6.890	11.310	4.530	9.318
8-3/8	Z-40134L	11.417	6.890	11.580	4.720	9.318
8-1/2	Z-40136L	11.417	6.890	12.320	4.800	10.066
8-3/4	Z-40140L	11.811	6.890	12.320	4.880	10.066
8-7/8	Z-40142L	11.811	6.890	12.320	4.960	10.066
9	Z-40144L	12.205	6.890	12.320	5.040	10.066
9-1/8	Z-40146L	12.205	6.890	12.320	5.160	10.066
9-1/4	Z-40148L	12.205	6.890	12.980	5.240	11.798

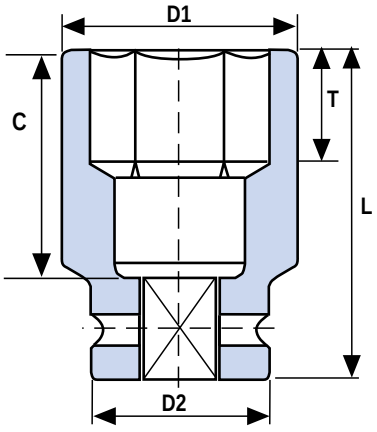

2½" SQUARE DRIVE

SIX POINT IMPACT SOCKETS

STANDARD METRIC SIZES

SIZE	PART#	D1	D2	L	T	C
41	Z-40M41	104	127	115	21.5	60
42	Z-40M42	104	127	115	21.5	60
43	Z-40M43	104	127	115	25	60
44	Z-40M44	104	127	115	21.5	60
45	Z-40M45	104	127	115	21.5	60
46	Z-40M46	104	127	115	25.5	60
47	Z-40M47	104	127	115	23.5	60
48	Z-40M48	104	127	115	23.5	60
49	Z-40M49	104	127	115	27	60
50	Z-40M50	104	127	115	23.5	60
51	Z-40M51	104	127	115	27	60
52	Z-40M52	104	127	115	27	60
54	Z-40M54	104	127	115	30	60
55	Z-40M55	104	127	115	27	60
56	Z-40M56	104	127	115	28	60
57	Z-40M57	104	127	115	32.5	60
58	Z-40M58	104	127	115	28	60
59	Z-40M59	104	127	115	33	60
60	Z-40M60	104	127	115	28	60
61	Z-40M61	104	127	115	28	60
62	Z-40M62	104	127	115	35	60
65	Z-40M65	104	127	115	35	60
67	Z-40M67	104	127	115	38	60
70	Z-40M70	104	127	115	38	60
73	Z-40M73	115	127	125	41	70
75	Z-40M75	115	127	125	41	70
76	Z-40M76	115	127	125	44	70
80	Z-40M80	115	127	125	37	70
85	Z-40M85	127	127	130	40	75
86	Z-40M86	127	127	130	49	75
90	Z-40M90	135	127	132	43	77
95	Z-40M95	140	127	132	49	77
100	Z-40M100	145	127	141	54	86
105	Z-40M105	150	127	141	54	86
110	Z-40M110	160	127	150	62	95
115	Z-40M115	165	127	158	57	103
120	Z-40M120	170	127	158	67	103
125	Z-40M125	170	127	158	67	103
130	Z-40M130	180	127	174	76	119
135	Z-40M135	190	127	174	76	119
140	Z-40M140	190	127	176	79	121
145	Z-40M145	200	150	182	83	127
150	Z-40M150	210	150	190	88	135
155	Z-40M155	210	150	190	88	135
160	Z-40M160	220	150	194	91	139
165	Z-40M165	230	175	201	94	146
170	Z-40M170	230	175	201	94	146
175	Z-40M175	240	175	208	99	153
180	Z-40M180	240	175	214	104	159
185	Z-40M185	250	175	214	104	159
190	Z-40M190	260	175	218	107	163
195	Z-40M195	260	175	222	109	167
200	Z-40M200	270	175	226	112	171
210	Z-40M210	280	175	232	115	177
215	Z-40M215	290	175	239	120	184
225	Z-40M225	300	175	258	126	203
235	Z-40M235	310	175	275	131	220

DEEP METRIC SIZES

SIZE	PART#	D1	D2	L	T	C
41	Z-40M41L	104	127	192	21.5	132
42	Z-40M42L	104	127	192	21.5	132
43	Z-40M43L	104	127	192	25	132
44	Z-40M44L	104	127	192	21.5	132
45	Z-40M45L	104	127	192	21.5	132
46	Z-40M46L	104	127	192	25.5	132
47	Z-40M47L	104	127	192	23.5	132
48	Z-40M48L	104	127	192	23.5	132
49	Z-40M49L	104	127	192	27	132
50	Z-40M50L	104	127	192	23.5	132
51	Z-40M51L	104	127	192	27	132
52	Z-40M52L	104	127	192	27	132
54	Z-40M54L	104	127	192	30	132
55	Z-40M55L	104	127	192	27	132
56	Z-40M56L	104	127	192	28	132
57	Z-40M57L	104	127	192	32.5	132
58	Z-40M58L	104	127	192	28	132
59	Z-40M59L	104	127	192	33	132
60	Z-40M60L	104	127	192	28	132
61	Z-40M61L	104	127	192	28	132
62	Z-40M62L	104	127	192	35	132
65	Z-40M65L	104	127	192	35	132
67	Z-40M67L	104	127	192	38	132
70	Z-40M70L	104	127	192	38	132
73	Z-40M73L	115	127	192	41	132
75	Z-40M75L	115	127	192	41	132
76	Z-40M76L	115	127	192	44	132
80	Z-40M80L	115	127	192	37	132
85	Z-40M85L	127	127	192	40	132
86	Z-40M86L	127	127	192	49	132
90	Z-40M90L	135	127	192	43	132
95	Z-40M95L	140	127	192	49	132
100	Z-40M100L	145	127	198	54	138
105	Z-40M105L	150	127	198	54	138
110	Z-40M110L	160	127	207	62	147
115	Z-40M115L	165	127	207	57	147
120	Z-40M120L	170	127	215	67	155
125	Z-40M125L	170	127	215	67	155
130	Z-40M130L	180	127	223	76	163
135	Z-40M135L	190	127	231	76	151
140	Z-40M140L	190	127	234	79	174
145	Z-40M145L	200	150	240	83	180
150	Z-40M150L	210	150	248	88	188
155	Z-40M155L	210	150	248	88	188
160	Z-40M160L	220	150	252	91	192
165	Z-40M165L	230	175	260	94	200
170	Z-40M170L	230	175	260	94	200
175	Z-40M175L	240	175	264	99	204
180	Z-40M180L	240	175	272	104	212
185	Z-40M185L	250	175	272	104	212
190	Z-40M190L	260	175	276	107	216
195	Z-40M195L	260	175	280	109	220
200	Z-40M200L	270	175	284	112	224
210	Z-40M210L	280	175	290	115	230
215	Z-40M215L	290	175	316	120	256
225	Z-40M225L	300	175	316	126	256
235	Z-40M235L	310	175	333	131	273

2½" SQUARE DRIVE

ACCESSORIES

No one offers a broader line of 2-1/2" drive sockets than ATP for the heaviest bolting applications in construction, plant maintenance, power generation, shipbuilding, and refining,

OZAT sockets prove their value. They are guaranteed for hydraulic bolting jobs as well as for large impact wrenches, OZAT has a socket to exactly match your application. If not available from our standard product range, we'll custom design one for you.
(See Page 71.)

ADAPTERS

PART#	FEMALE	MALE	L
A4024	2-1/2	1-1/2	5.380
A4056	2-1/2	3-1/2	5.538

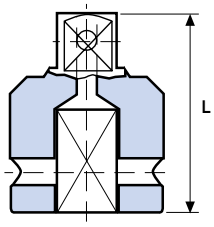

DOUBLE ENDED FEMALE ADAPTERS

PART#	D1	D2	L
AN4024	2-1/2	1-1/2	4.53
AN4040	2-1/2	2-1/2	4.61
AN5640	2-1/2	3-1/2	6.34

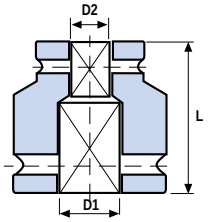

DOUBLE ENDED MALE ADAPTERS

PART#	D1	L
Z4005	3.31	5
Z4006	3.31	6
Z4008	3.31	8
Z4010	3.31	10
Z4015	3.31	15
Z4020	3.31	20
Z4026	3.31	26

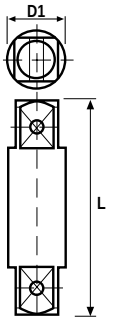

UNIVERSAL JOINT

SIZE	PART#
2-1/2	U4040

RETAINING PINS AND RINGS

SQUARE DRIVE	THROUGH HEX SIZE	PIN #	RING#	d	L	D
2-1/2	5-1/2 - 140mm	P40127	R40127	.312	4.290	4.446
2-1/2	6-3/8 - 160mm	P40150	R40150	.312	5.187	5.309
2-1/2	Above 6-3/8	P40175	R40175	.312	6.162	6.318

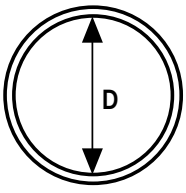

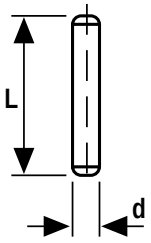

3½" SQUARE DRIVE

SIX POINT IMPACT SOCKETS

STANDARD FRACTIONAL SIZES

SIZE	PART#	D1	D2	L	T	C
3-7/8	Z-5662	6.890	6.890	6.435	2.125	3.371
3-15/16	Z-5663	6.890	6.890	6.435	2.125	3.725
4	Z-5664	6.890	6.890	6.435	2.125	3.725
4-1/16	Z-5665	6.890	6.890	6.435	2.125	3.725
4-1/8	Z-5666	6.890	6.890	6.435	2.125	3.725
4-3/16	Z-5667	6.890	6.890	6.786	2.440	3.725
4-1/4	Z-5668	6.890	6.890	6.786	2.440	3.725
4-5/16	Z-5669	6.890	6.890	6.786	2.440	4.040
4-3/8	Z-5670	6.890	6.890	6.786	2.440	4.040
4-7/16	Z-5671	6.890	6.890	6.786	2.440	4.040
4-1/2	Z-5672	6.890	6.890	6.786	2.440	4.040
4-5/8	Z-5674	6.890	6.890	7.100	2.640	4.040
4-3/4	Z-5676	6.890	6.890	7.100	2.640	4.355
4-7/8	Z-5678	6.890	6.890	7.100	2.640	4.355
5	Z-5680	7.480	6.890	7.722	2.830	4.355
5-1/8	Z-5682	7.480	6.890	7.722	3.000	4.355
5-3/16	Z-5683	7.480	6.890	7.722	3.000	4.670
5-1/4	Z-5684	7.480	6.890	7.722	3.000	4.670
5-3/8	Z-5686	7.874	6.890	7.722	3.000	4.670
5-1/2	Z-5688	7.874	6.890	8.000	3.110	5.300
5-5/8	Z-5690	8.268	6.890	8.270	3.270	5.300
5-3/4	Z-5692	8.268	6.890	8.270	3.270	5.300
5-7/8	Z-5694	8.268	6.890	8.270	3.460	5.300
6	Z-5696	8.661	6.890	8.350	3.460	5.300
6-1/8	Z-5698	8.661	6.890	8.350	3.460	5.300
6-1/4	Z-56100	9.055	6.890	8.500	3.580	5.458
6-3/8	Z-56102	9.055	6.890	8.500	3.580	5.458
6-1/2	Z-56104	9.055	6.890	8.970	3.700	5.930
6-5/8	Z-56106	9.449	6.890	8.970	3.700	5.930
6-3/4	Z-56108	9.449	6.890	8.970	3.900	5.930
6-7/8	Z-56110	9.843	6.890	8.970	3.900	5.930
7	Z-56112	9.843	6.890	9.250	4.090	6.206
7-1/8	Z-56114	9.843	6.890	9.250	4.090	6 206
7-1/4	Z-56116	10.236	6.890	9.250	4.090	6.206
7-3/8	Z-56118	10.236	6.890	9.438	4.210	6.363
7-1/2	Z-56120	10.630	6.890	9.438	4.210	6.363
7-5/8	Z-56122	10.630	6.890	9.600	4.290	6.521
7-3/4	Z-56124	10.630	6.890	9.710	4.410	6.678
7-13/16	Z-56125	11.024	6.890	9.710	4.410	6.678
7-7/8	Z-56126	11.024	6.890	9.710	4.410	6.678
8	Z-56128	11.024	6.890	10.000	4.530	7.229
8-1/8	Z-56130	11.417	6.890	10.000	4.530	7.229
8-1/4	Z-56132	11.417	6.890	10.000	4.530	7.229
8-3/8	Z-56134	11.417	6.890	10.250	4.720	7.229
8-1/2	Z-56136	11.811	6.890	10.410	4.800	7.859
8-3/4	Z-56140	12.205	6.890	10.530	4.880	7.859
8-7/8	Z-56142	12.205	6.890	10.640	4.960	7.859
9	Z-56144	12.205	6.890	10.760	5.040	7.859
9-1/8	Z-56146	12.598	6.890	10.880	5.160	7.859
9-1/4	Z-56148	12.598	6.890	11.110	5.240	9.198

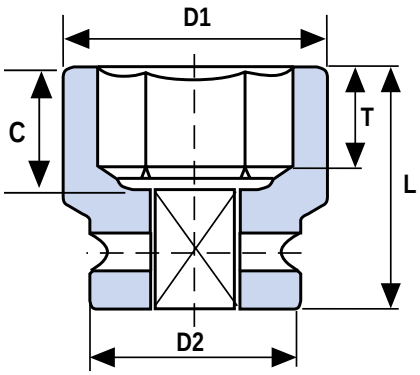

3½" SQUARE DRIVE

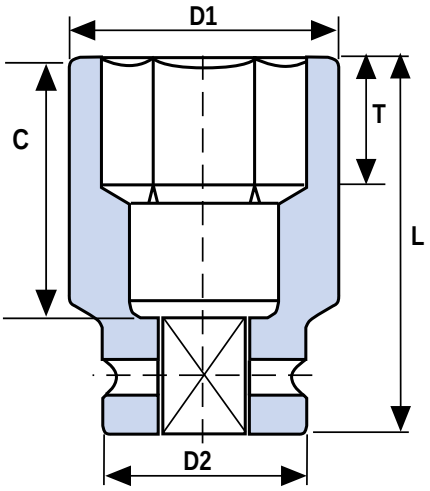

SIX POINT IMPACT SOCKETS

DEEP FRACTIONAL SIZES

SIZE	PART#	D1	D2	L	T	C
3-7/8	Z-5662L	6.890	6.890	10.800	2.125	7.781
3-15/16	Z-5663L	6.890	6.890	10.800	2.125	7.781
4	Z-5664L	6.890	6.890	10.800	2.125	7.781
4-1/16	Z-5665L	6.890	6.890	10.800	2.125	7.781
4-1/8	Z-5666L	6.890	6.890	10.800	2.125	7.781
4-3/16	Z-5667L	6.890	6.890	10.800	2.440	7.781
4-1/4	Z-5668L	6.890	6.890	10.800	2.440	7.781
4-5/16	Z-5669L	6.890	6.890	10.800	2.440	7.781
4-3/8	Z-5670L	6.890	6.890	10.800	2.440	7.781
4-7/16	Z-5671L	6.890	6.890	10.800	2.440	7.781
4-1/2	Z-5672L	6.890	6.890	10.800	2.440	7.781
4-5/8	Z-5674L	6.890	6.890	10.800	2.640	7.781
4-3/4	Z-5676L	6.890	6.890	10.800	2.640	7.781
4-7/8	Z-5678L	6.890	6.890	10.800	2.640	7.781
5	Z-5680L	7.480	6.890	10.800	2.830	7.781
5-1/8	Z-5682L	7.480	6.890	10.920	3.000	7.781
5-3/16	Z-5683L	7.480	6.890	10.920	3.000	7.899
5-1/4	Z-5684L	7.480	6.890	10.920	3.000	7.899
5-3/8	Z-5686L	7.874	6.890	10.920	3.000	7.899
5-1/2	Z-5688L	7.874	6.890	11.230	3.110	8.568
5-5/8	Z-5690L	8.268	6.890	11.500	3.270	8.568
5-3/4	Z-5692L	8.268	6.890	11.500	3.270	8.568
5-7/8	Z-5694L	8.268	6.890	11.500	3.460	8.568
6	Z-5696L	8.661	6.890	11.580	3.460	8.568
6-1/8	Z-5698L	8.661	6.890	11.580	3.460	8.568
6-1/4	Z-56100L	9.055	6.890	11.740	3.580	8.725
6-3/8	Z-56102L	9.055	6.890	11.740	3.580	8.725
6-1/2	Z-56104L	9.055	6.890	12.220	3.700	9.198
6-5/8	Z-56106L	9.449	6.890	12.220	3.700	9.198
6-3/4	Z-56108L	9.449	6.890	12.220	3.900	9.198
6-7/8	Z-56110L	9.843	6.890	12.220	3.900	9.198
7	Z-56112L	9.843	6.890	12.480	4.090	9.473
7-1/8	Z-56114L	9.843	6.890	12.480	4.090	9.473
7-1/4	Z-56116L	10.236	6.890	12.480	4.090	9.473
7-3/8	Z-56118L	10.236	6.890	12.630	4.210	9.631
7-1/2	Z-56120L	10.630	6.890	12.630	4.210	9.631
7-5/8	Z-56122L	10.630	6.890	12.800	4.290	9.788
7-3/4	Z-56124L	10.630	6.890	12.950	4.410	9.946
7-13/16	Z-56125L	11.024	6.890	12.950	4.410	9.946
7-7/8	Z-56126L	11.024	6.890	12.950	4.410	9.946
8	Z-56128L	11.024	6.890	13.220	4.530	10.497
8-1/8	Z-56130L	11.417	6.890	13.220	4.530	10.497
8-1/4	Z-56132L	11.417	6.890	13.220	4.530	10.497
8-3/8	Z-56134L	11.417	6.890	I 3.500	4.720	10.497
8-1/2	Z-56136L	11.811	6.890	13.650	4.800	11.127
8-3/4	Z-56140L	12.205	6.890	13.800	4.880	11.127
8-7/8	Z-56142L	12.205	6.890	13.920	4.960	11.127
9	Z-56144L	12.205	6.890	14.000	5.040	11.127
9-1/8	Z-56146L	12.598	6.890	14.110	5.160	11.127
9-1/4	Z-56148L	12.598	6.890	14.430	5.240	12.426

3½" SQUARE DRIVE

SIX POINT IMPACT SOCKETS

STANDARD METRIC SIZES

SIZE	PART#	D1	D2	L	T	C
100	Z-56M100	175	175	165	54	95
105	Z-56M105	175	175	165	54	94
110	Z-56M110	175	175	174	62	103
115	Z-56M115	175	175	174	57	103
120	Z-56M120	175	175	182	67	111
125	Z-56M125	175	175	182	67	111
130	Z-56M130	190	175	198	76	111
135	Z-56M135	190	175	198	76	119
140	Z-56M140	200	175	205	79	135
145	Z-56M145	210	175	212	83	135
150	Z-56M150	210	175	212	88	135
155	Z-56M155	220	175	214	88	135
160	Z-56M160	220	175	218	91	139
165	Z-56M165	230	175	230	94	151
170	Z-56M170	240	175	230	94	151
175	Z-56M175	250	175	230	99	151
180	Z-56M180	250	175	237	104	158
185	Z-56M185	260	175	237	104	158
190	Z-56M190	260	175	242	107	162
195	Z-56M195	270	175	246	109	166
200	Z-56M200	280	175	249	112	170
210	Z-56M210	290	175	256	115	184
215	Z-56M215	300	175	263	120	220
225	Z-56M225	310	175	273	126	200
230	Z-56M230	310	175	276	128	200
235	Z-56M235	320	175	279	131	200

DEEP METRIC SIZES

SIZE	PART#	D1	D2	L	T	C
100	Z-56M100L	175	175	277	54	198
105	Z-56M105L	175	175	277	54	198
110	Z-56M110L	175	175	277	62	198
115	Z-56M115L	175	175	277	57	198
120	Z-56M120L	175	175	277	67	198
125	Z-56M125L	175	175	277	67	198
130	Z-56M130L	190	175	280	76	198
135	Z-56M135L	190	175	280	76	201
140	Z-56M140L	200	175	288	79	218
145	Z-56M145L	210	175	295	83	218
150	Z-56M150L	210	175	295	88	218
155	Z-56M155L	220	175	297	88	218
160	Z-56M160L	220	175	301	91	222
165	Z-56M165L	230	175	313	94	234
170	Z-56M170L	240	175	313	94	234
175	Z-56M175L	250	175	313	99	234
180	Z-56M180L	250	175	320	104	241
185	Z-56M185L	260	175	320	104	241
190	Z-56M190L	260	175	324	107	245
195	Z-56M195L	270	175	328	109	249
200	Z-56M200L	280	175	332	112	253
210	Z-56M210L	290	175	339	115	267
215	Z-56M215L	300	175	346	120	283
225	Z-56M225L	310	175	357	126	283
230	Z-56M230L	310	175	359	128	283
235	Z-56M235L	320	175	362	131	283

ACCESSORIES

ADAPTERS

PART#	FEMALE	MALE	L
A5640	3-1/2	2-1/2	7.137

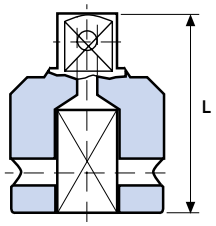

DOUBLE ENDED MALE EXTENSIONS

PART#	D1	L
Z5610	4.685	10
Z5620	4.685	20
Z5640	4.685	40

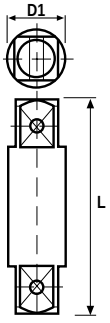

DOUBLE ENDED FEMALE ADAPTERS

PART#	D1	L
AN5640	3-1/2	2-1/2
AN5656	3-1/2	3-1/2

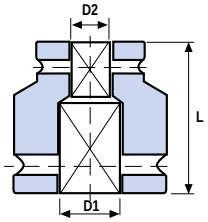

RETAINING PINS AND RINGS

SQUARE DRIVE	THROUGH HEX SIZE	PIN #	RING#	d	L	D
3-1/2	ALL	P56175	R56175	.390	6.24	6.24

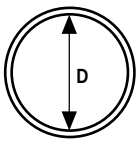

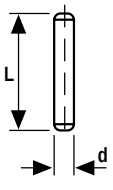

#5 SPLINE DRIVE

SIX POINT IMPACT SOCKETS

STANDARD FRACTIONAL SIZES

SIZE	PART#	D1	D2	L	T	C
3/4	Z-9512	1.890	2.362	2.730	0.374	1.006
13/16	Z-9513	1.890	2.362	2.730	0.435	1.006
7/8	Z-9514	1.890	2.362	2.730	0.512	1.006
15/16	Z-9515	1.890	2.362	2.730	0.512	1.006
1	Z-9516	1.929	2.362	2.730	0.512	1.006
1-1/16	Z-9517	2.008	2.362	2.730	0.512	1.006
1-1/8	Z-9518	2.008	2.362	2.730	0.650	1.006
1-3/16	Z-9519	2.126	2.362	2.730	0.650	1.006
1-1/4	Z-9520	2.362	2.362	2.925	0.669	1.203
1-5/16	Z-9521	2.362	2.362	3.000	0.748	1.281
1-3/8	Z-9522	2.362	2.362	3.000	0.748	1.281
1-7/16	Z-9523	2.480	2.362	3.000	0.748	1.281
1-1/2	Z-9524	2.480	2.362	3.125	0.866	1.400
1-9/16	Z-9525	2.638	2.362	3.125	0.866	1.400
1-5/8	Z-9526	2.638	2.362	3.125	0.866	1.400
1-11/16	Z-9527	2.638	2.362	3.275	0.984	1.557
1-3/4	Z-9528	2.874	2.362	3.275	1.000	1.557
1-13/16	Z-9529	2.874	2.362	3.275	1.000	1.577
1-7/8	Z-9530	2.874	2.362	3.432	1.063	1.715
1-15/16	Z-9531	2.874	2.362	3.432	1.063	1.715
2	Z-9532	3.228	2.362	3.432	1.063	1.715
2-1/16	Z-9533	3.228	3.386	3.625	1.181	1.911
2-1/8	Z-9534	3.228	3.386	3.625	1.181	1.911
2-3/16	Z-9535	3.228	3.386	3.740	1.260	2.030
2-1/4	Z-9536	3.465	3.386	3.740	1.299	2.030
2-5/16	Z-9537	3.465	3.386	3.740	1.299	2.030
2-3/8	Z-9538	3.465	3.386	3.822	1.378	2.108
2-7/16	Z-9539	3.465	3.386	3.900	1.378	2.108
2-1/2	Z-9540	3.937	3.386	3.900	1.378	2.108
2-9/16	Z-9541	3.937	3.386	3.900	1.378	2.108
2-5/8	Z-9542	3.937	3.386	3.978	1.496	2.266
2-11/16	Z-9543	3.937	3.386	3.978	1.496	2.266
2-3/4	Z-9544	3.937	3.386	3.978	1.496	2 266
2-13/16	Z-9545	4.134	3.386	4.210	1.575	2.502
2-7/8	Z-9546	4.134	3.386	4.210	1.614	2.502
2-15/16	Z-9547	4.134	3.386	4.210	1.614	2.502
3	Z-9548	4.291	3.386	4.446	1.732	2.738
3-1/16	Z-9549	4.291	3.386	4.446	1.732	2.738
3-1/8	Z-9550	4.291	3.386	4.446	1.732	2.738
3-1/4	Z-9552	5.062	3.386	4.909	2.106	2.781
3-5/16	Z-9553	5.062	3.386	4.909	2.106	2.781
3-3/8	Z-9554	5.062	3.386	4.909	2.106	2.781
3-1/2	Z-9556	5.129	3.386	4.909	2.106	2.781
3-5/8	Z-9558	5.256	3.386	4.909	2.106	2.781
3-3/4	Z-9560	5.309	3.386	4.909	2.106	2.781
3-7/8	Z-9562	5.442	3.386	4.909	2.106	2.781
4	Z-9564	5.511	3.386	4.909	2.106	2.781

DEEP FRACTIONAL SIZES

SIZE	PART#	D1	D2	L	T	C
3/4	Z-9512L	1.890	2.362	6.240	0.374	4.549
13/16	Z-9513L	1.890	2.362	6.240	0.435	4.549
7/8	Z-9514L	1.890	2.362	6.240	0.512	4.549
15/16	Z-9515L	1.890	2.362	6.240	0.512	4.549
1	Z-9516L	1.929	2.362	6.240	0.512	4.549
1-1/16	Z-9517L	2.008	2.362	6.240	0.512	4.549
1-1/8	Z-9518L	2.008	2.362	6.240	0.650	4.549
1-3/16	Z-9519L	2.126	2.362	6.240	0.650	4.549
1-1/4	Z-9520L	2.362	2.362	6.240	0.669	4.549
1-5/16	Z-9521L	2.362	2.362	6.240	0.748	4.549
1-3/8	Z-9522L	2.362	2.362	6.240	0.748	4.549
1-7/16	Z-9523L	2.480	2.362	6.240	0.748	4.549
1-1/2	Z-9524L	2.480	2.362	6.240	0.866	4.549
1-9/16	Z-9525L	2.638	2.362	6.240	0.866	4.549
1-5/8	Z-9526L	2.638	2.362	6.240	0.866	4.549
1-11/16	Z-9527L	2.638	2.362	6.240	0.984	4.549
1-3/4	Z-9528L	2.874	2.362	6.240	1.000	4.549
1-13/16	Z-9529L	2.874	2.362	6.240	1.000	4.549
1-7/8	Z-9530L	2.874	2.362	6.240	1.063	4.549
1-15/16	Z-9531L	2.874	2.362	6.240	1.063	4.549
2	Z-9532L	3.228	2.362	6.240	1.063	4.549
2-1/16	Z-9533L	3.228	3.386	6.240	1.181	4.549
2-1/8	Z-9534L	3.228	3.386	6.240	1.181	4.549
2-3/16	Z-9535L	3.228	3.386	6.240	1.260	4.549
2-1/4	Z-9536L	3.465	3.386	6.240	1.299	4.549
2-5/16	Z-9537L	3.465	3.386	6.240	1.299	4.549
2-3/8	Z-9538L	3.465	3.386	6.240	1.373	4.549
2-7/16	Z-9539L	3.465	3.386	6.240	1.378	4.549
2-1/2	Z-9540L	3.937	3.386	6.240	1.378	4.549
2-9/16	Z-9541L	3.937	3.386	6.240	1.378	4.549
2-5/8	Z-9542L	3.937	3.386	6.240	1.496	4.549
2-11/16	Z-9543L	3.937	3.386	6.240	1.496	4.549
2-3/4	Z-9544L	3.937	3.386	6.240	1.496	4.549
2-13/16	Z-9545L	4.134	3.386	6.240	1.575	4.549
2-7/8	Z-9546L	4.134	3.386	6.240	1.614	4.549
2-15/16	Z-9547L	4.134	3.386	6.240	1.614	4.549
3	Z-9548L	4.291	3.386	6.240	1.732	4.628
3-1/16	Z-9549L	4.291	3.386	6.310	1.732	4.628
3-1/8	Z-9550L	4 291	3 386	6.310	1 732	4.628

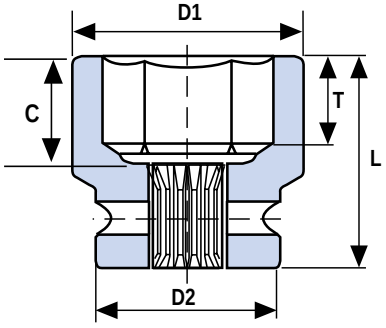

#5 SPLINE DRIVE

SIX POINT IMPACT SOCKETS

STANDARD METRIC SIZES

SIZE	PART#	D1	D2	L	T	C
19	Z-95M19	48	60	70	0.374	26
20	Z-95M20	48	60	70	0.394	26
21	Z-95M21	48	60	70	0.394	26
22	Z-95M22	48	60	70	0.394	26
23	Z-95M23	48	60	70	0.472	26
24	Z-95M24	49	60	70	0.472	26
25	Z-95M25	49	60	70	0.512	26
26	Z-95M26	51	60	70	0.512	26
27	Z-95M27	51	60	70	0.512	26
28	Z-95M28	51	60	70	0.551	26
29	Z-95M29	54	60	70	0.551	26
30	Z-95M30	54	60	70	0.650	26
31	Z-95M31	60	60	75	0.650	31
32	Z-95M32	60	60	75	0.650	31
33	Z-95M33	60	60	75	0.669	31
34	Z-95M34	60	60	77	0.669	33
35	Z-95M35	60	60	77	0.748	33
36	Z-95M36	63	60	77	0.748	33
37	Z-95M37	63	60	77	0.748	33
38	Z-95M38	63	60	80	0.866	36
39	Z-95M39	67	60	80	0.866	36
40	Z-95M40	67	60	80	0.866	36
41	Z-95M41	67	60	80	0.866	36
42	Z-95M42	67	60	80	0.846	36
43	Z-95M43	67	60	84	0.984	40
44	Z-95M44	73	60	84	0.846	40
45	Z-95M45	73	60	84	0.846	40
46	Z-95M46	73	60	84	1.004	40
47	Z-95M47	73	60	84	0.925	40
48	Z-95M48	73	60	88	0.925	44
49	Z-95M49	73	60	88	1.063	44
50	Z-95M50	82	60	88	0.925	44
51	Z-95M51	82	60	88	1.063	44
52	Z-95M52	82	60	88	1.063	44
54	Z-95M54	82	60	93	1.181	49
55	Z-95M55	82	60	93	1.063	49
56	Z-95M56	88	86	96	1.102	52
57	Z-95M57	88	76	96	1.299	52
58	Z-95M58	88	86	96	1.102	52
59	Z-95M59	88	86	96	1.299	52
60	Z-95M60	88	86	96	1.102	52
61	Z-95M61	88	86	98	1.102	54
62	Z-95M62	88	86	100	1.378	56
65	Z-95M65	100	86	100	1.378	56
67	Z-95M67	100	86	102	1.496	58
70	Z-95M70	100	86	102	1.496	58
73	Z-95M73	105	86	108	1.614	64
75	Z-95M75	105	86	108	1.614	64
76	Z-95M76	109	86	114	1.732	70
80	Z-95M80	115	86	114	1.457	70

DEEP METRIC SIZES

SIZE	PART#	D1	D2	L	T	C
19	Z-95M19L	48	60	160	0.374	116
20	Z-95M20L	48	60	160	0.394	116
21	Z-95M21L	48	60	160	0.394	116
22	Z-95M22L	48	60	160	0.394	116
23	Z-95M23L	48	60	160	0.472	116
24	Z-95M24L	49	60	160	0.472	116
25	Z-95M25L	49	60	160	0.512	116
26	Z-95M26L	51	60	160	0.512	116
27	Z-95M27L	51	60	160	0.512	116
28	Z-95M28L	51	60	160	0.551	116
29	Z-95M29L	54	60	160	0.551	116
30	Z-95M30L	54	60	160	0.650	116
31	Z-95M31L	60	60	160	0.650	116
32	Z-95M32L	60	60	160	0.650	116
33	Z-95M33L	60	60	160	0.669	116
34	Z-95M34L	60	60	160	0.669	116
35	Z-95M35L	60	60	160	0.748	116
36	Z-95M36L	63	60	160	0.748	116
37	Z-95M37L	63	60	160	0.748	116
38	Z-95M38L	63	60	160	0.866	116
39	Z-95M39L	67	60	160	0.866	116
40	Z-95M40L	67	60	160	0.866	116
41	Z-95M41L	67	60	160	0.866	116
42	Z-95M42L	67	60	160	0.846	116
43	Z-95M43L	67	60	160	0.984	116
44	Z-95M44L	73	60	160	0.846	116
45	Z-95M45L	73	60	160	0.846	116
46	Z-95M46L	73	60	160	1.004	116
47	Z-95M47L	73	60	160	0.925	116
48	Z-95M48L	73	60	160	0.925	116
49	Z-95M49L	73	60	160	1.063	116
50	Z-95M50L	82	60	160	0.925	116
51	Z-95M51L	82	60	160	1.063	116
52	Z-95M52L	82	60	160	1.063	116
54	Z-95M54L	82	60	160	1.181	116
55	Z-95M55L	82	60	160	1.063	116
56	Z-95M56L	88	86	160	1.102	116
57	Z-95M57L	88	76	160	1.299	116
58	Z-95M58L	88	86	160	1.102	116
59	Z-95M59L	88	86	160	1.299	116
60	Z-95M60L	88	86	160	1.102	116
61	Z-95M61L	88	86	160	1.102	116
62	Z-95M62L	88	86	160	1.378	116
65	Z-95M65L	100	86	160	1.378	116
67	Z-95M67L	100	86	160	1.496	116
70	Z-95M70L	100	86	160	1.496	116
73	Z-95M73L	105	86	160	1 614	116
75	Z-95M75L	105	86	162	1.614	116
76	Z-95M76L	109	86	162	1.732	118
80	Z-95M80L	115	86	162	1.457	118

BUDD WHEEL SOCKETS

SIZE	PART#	D1	D2	L	T
13/16 X 1-1/2	Z-9524BS	2.48	2.36	4.133	0.571
13/16	Z-9513B	2.008	2.36	2.756	0.472

#4 SPLINE DRIVE

IMPACT SOCKETS

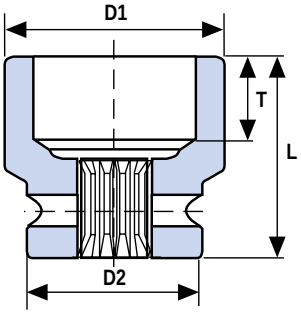

UNIVERSAL JOINT

SIZE	PART#
#4 Spline Drive	U9494

6 POINT IMPACT SOCKETS REGULAR LENGTH

NOMINAL OPENING			D1	D2	L	
mm	A/F Inch	CATALOG No.	mm	mm	mm	t min
17	1-1/16”	Z-9417M27	46.0	52	59	13.0
	1-1/8”	Z-9418	48	52	65	16.5
30	1 3/16”	Z-9419M30	50	52	65	16.5
	1-1/4	Z-9420	52	52	65	17
	1-5/16”	Z-9421	52	52	68	19
35	1 3/8”	Z-9422M35	52	52	68	19
	1-7/16”	Z-9423	52	52	68	19
38	1-1/2”	Z-9424M38	52	52	73	22
	1-9/16”	Z-9425	57	52	73	22
41	1-5/8”	Z-9426M41	57	52	73	22
	1-11/16”	Z-9427	57	52	73	22
	1-3/4”	Z-9428	63	52	78	25.5
	1-13/16”	Z-9429	67	52	78	25.5
	1-7/8”	Z-9430	67	52	78	27
	1-15/16”	Z-9431	70	52	81	27
	2”	Z-9432	73	52	81	27
	2-1/16”	Z-9433	73	52	85	30
	2-1/8”	Z-9434	78	52	88	32
	2-1/4”	Z-9435	78	52	88	23

ACCESSORIES FOR #5 SPLINE DRIVE

ADAPTERS

PART#	FEMALE	MALE
A9516	#5	1”
A9524	#5	1-1/2”
A2495	1-1/2”	#5

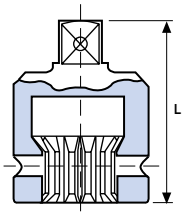

EXTENSIONS

PART#	L
E9508	8
E9515	15

UNIVERSAL JOINT

SIZE	PART#
#5 Spline Drive	U9595

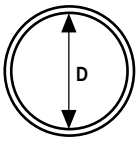

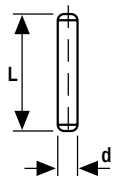

UNIVERSAL JOINT REPAIR KITS

PART #	DESCRIPTION
95UK1	Retainer Kit Contents: Hex Plunger, Lock Button, Inner & Outer Springs
95UK2	Pin Kit Contents: Drive Pin, Trunions, Spiral Pins
95UK3	Retrofit Kit Contents: All Parts From the Above 2 Kits

RETAINING PINS AND RINGS

SQUARE DRIVE	THROUGH HEX SIZE	PIN #	RING#	d	L	D
#5	2-3/16-55mm	P9560	R9560	.950	1.950	1.950
#5	Above 2-3/16	P9586	R9586	.950	2.964	2.964

GRUPO AG®

01.800.890.0799
www.AGgrupo.mx
contacto@aggrupo.mx
Chihuahua, Chihuahua

Version. 1 10.2016